Part No.509002100002
Rev: C
Aug. 2024

Operation Manual

GTTZ10EJ（ML08EJ/ML270EJ）

ML08EJ（ML08EJ/ML270EJ）

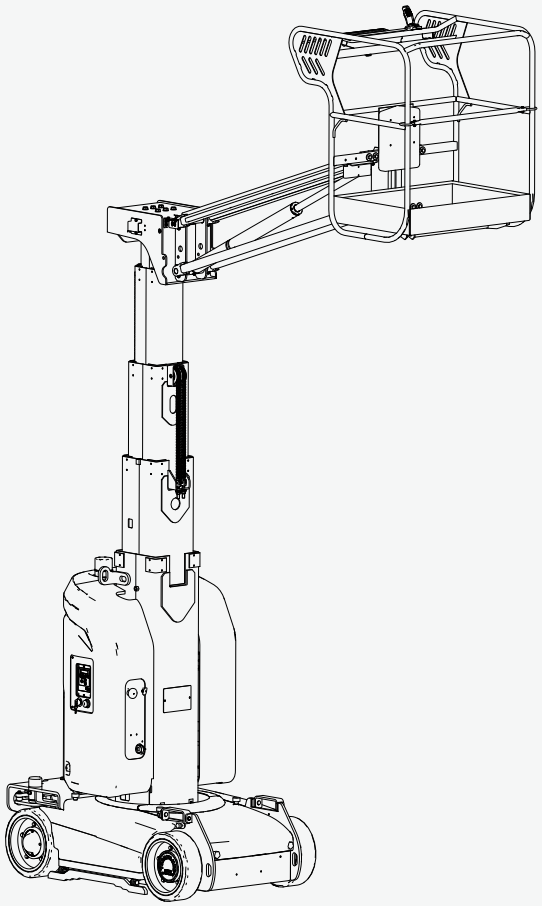

SINOBOOM

⚠ WARNING

Operating, servicing and maintaining this vehicle or equipment can expose you to chemicals including engine exhaust, carbon monoxide, phthalates, and lead, which are known to the State of California to cause cancer and birth defects or other reproductive harm. To minimize exposure, avoid breathing exhaust, do not idle the engine except as necessary, service your vehicle or equipment in a well-ventilated area and wear gloves or wash your hands frequently when servicing. For more information go to: www.P65warnings.ca.gov.
For disposal, please follow your nation regulation.

Manual revision history:

REV	DATE	DESCRIPTION	REMARK
A	Nov, 2020	Original issue	
B	Mar, 2022	Modified the emergency lowering operation of jib, updated schematics and added forklift pockets.	
C	Aug, 2024	Modified the metric trade identification, added the EC Declaration of Conformity, staged lowering precautions, special status codes, operator protective operation, and revised decals diagram.	

Please contact us:

Website : www.sinoboom.com

E-mail : sales@sinoboom.com

Sales Tel : 0086-0731-87116222

Service Tel : 0086-0731-87116333

Address : No.128, East Jinzhou Avenue, Ningxiang High-tech Industrial Park, Changsha, Hunan, China

Zip Code : 410600

Copyright © Hunan Sinoboom Intelligent Equipment Co., Ltd. All Rights Reserved

The final interpretation right of this manual belongs to Hunan Sinoboom Intelligent Equipment Co., Ltd.

APPLICABLE RANGE

Use the following table to identify the specific serial number for models included in this manual. Check the model of your machine before consulting the manual, and then use the correct manual according to the serial number of the model. See the nameplate on your machine to identify the model and serial number (See ***Decals/Nameplates Inspection*** of the *Operation Manual* for details.)

Model	Trade Identification		Serial No.
	Metric	Imperial	
GTTZ10EJ	ML08EJ	ML270EJ	From 0900201054 to present
ML08EJ	ML08EJ	ML270EJ	From 0900201054 to present

NOTE:

- Product model is applied in product nameplate for distinction of products of different main parameters.
- Product trade identification is applied in marketing and machine decals for distinction of products of different main parameters, and can be classified as metric type and imperial type: The metric trade identification is applicable to machines for countries/regions using metric system or as specially required by customers; The imperial trade identification is applicable to the machines for countries/regions using imperial system or as specially required by customers.

This Page Intentionally Left Blank

STATEMENTS

Hunan Sinoboom Intelligent Equipment Co., Ltd. (Hereinafter referred to as Sinoboom) will upload the latest product manual information to the website www. sinoboom. com as soon as possible. However, due to continuous product improvement, the information in this manual is subject to change without prior notice.

This manual covers the basic parts information of one or more products. Therefore, please use this manual according to your needs. If you find problems in the manual or have suggestions for improvement, feel free to share your feedback with Sinoboom, and we will address these issues as soon as possible.

Feel free to consult and download the *Operation Manual*, *Maintenance Manual* and *Parts Manual* of the products you need online at www.sinoboom.com.

Hunan Sinoboom Intelligent Equipment Co., Ltd. retains the right of final interpretation of the manual.

SINOBOOM

All of the above are registered trademarks of Hunan Sinoboom Intelligent Equipment Co., Ltd..

EC Declaration of Conformity

WE

Hunan Sinoboom Intelligent Equipment Co., Ltd.
No.128 East Jinzhou Avenue, Ning Xiang High-tech Industrial Park, Changsha, Hunan, China
Declares the Machine models referred in this declaration
complies with the following derictive

The Machinery Directive: 2006/42/EC
The Electromagnetic compatibility Directive: 2014/30/EU

Applicable Harmonized standards:
EN ISO 12100:2010，EN 280-1:2022，EN 60204-1:2018

Product Name: Mobile elevating working platform
Product Model: XXXX
Serial Number: As per order
Trade Mark:
SINOBOOM
Authorised Representative and technical documentation for the machinery is available from and person authorized to compile the technical file:
Sinoboom B.V.
Nikkelstraat 26,NL-2984 AM Ridderkerk, The Netherlands

<Notified Body's Name, Notified Body's Number>
<Notified Body's Address>
The number of the EC-Type certificate: XXXX

Responsible for making this declaration is the

Manufacturer : Hunan Sinoboom Intelligent Equipment Co., Ltd.

Authorized representative established within the EU
Company Name: Sinoboom B.V.
Company Address: Nikkelstraat 26,NL-2984 AM Ridderkerk, The Netherlands

Issue date and place	Name and position	Signature and company stamp

This Page Intentionally Left Blank

This Page Intentionally Left Blank

TABLE OF CONTENTS

Introduction iii

1 Machine Specifications 1-1

2 Machine Components 2-1

3 Safety 3-1

Safety Definitions 3-1
Reporting Accidents..... 3-1
Electrocution Hazards..... 3-2
Tipping Hazards and Rated Load 3-2
Work Environment Hazards..... 3-4
Unsafe Operation Hazards..... 3-6
Fall Hazards..... 3-7
Collision Hazards 3-7
Crush Hazards 3-8
Explosion and Fire Hazards..... 3-9
Damaged Machine Hazards 3-9
Bodily Injury Hazards 3-9
Battery Hazards.....3-10
Welding and Polishing Requirements 3-11
Lockout after Each Use 3-12

4 Jobsite Inspection..... 4-1

5 Pre-operation Inspection 5-1

Tips for Conducting a Pre-operation Inspection 5-1
Conducting a Pre-operation Inspection 5-2
Inspecting Parts..... 5-2
Inspecting Entire Machine 5-2
Inspecting Hydraulic Oil Level..... 5-2
Inspecting the Battery level 5-3

6 Pre-operation Function Test .. 6-1

Preparing for a Pre-operation Function Test 6-1
Ground Controller 6-1
Testing Platform Controller (DTC system)..... 6-4
Platform Controller (Sinoboom system)..... 6-8
Testing the Drive Speed..... 6-11
Testing Emergency Lowering Function..... 6-11
Main boom emergency lowering .. 6-11
Jib boom emergency lowering 6-11
Testing the Pothole Protection 6-12
Testing the Tilt Protection 6-13
Testing the Weighing System 6-14

7 Operating the machine 7-1

Special Status Codes 7-1
Stability..... 7-1
Emergency Stop 7-3
Emergency Operating..... 7-4
Emergency Control 7-4
Emergency Towing/Dragging 7-5
Charging the Battery 7-6
Charger LED and Digital Display..... 7-9
Changing Charger Battery Curve 7-9
Driving on a Slope..... 7-9
Operator Protective Operation (If Equipped) 7-10

8 Transporting and Lifting the Machine..... 8-1

Lifting the Machine with a Forklift 8-2
Lifting the Machine with a Crane 8-2
Transporting the Machine 8-3

9 Maintenance 9-1

Maintenance Schedule..... 9-2
Conducting a Pre-delivery Inspection . 9-4
Maintenance Inspection Report 9-5

 © Aug. 2024

Major Modification and Repair Record 9-8
10 Decals/Nameplate Inspection 10-1
Appendix 1: Symbols and Description..... A-1
Appendix 2: Prepare the Work Record Before Delivery A-3
Appendix 3: Maintenance Inspection Report A-5
Appendix 4: Major Modification and Repair Record A-9

INTRODUCTION

Thank you for choosing and using the machinery of Hunan Sinoboom Intelligent Equipment Co., Ltd. Always read, understand and become familiar with the operation requirements of the machine and its associated safety procedures before operating, maintaining and repairing the machine. Operating the machine without becoming familiar with its specific operation requirements and safety procedures poses serious risks. Operators who follow safety rules and operate the machine carefully and effectively will prevent personal injury, property loss and accidents.

Use this machine only to transport tools to work locations and for performing tasks on the work platform. Operators must be competent and must obtain training to carefully use the machine and follow safety procedures. Only trained and authorized personnel may operate the machine.

This manual guides the operator in operating and using the machine. The operator is responsible for reading, understanding and implementing the operation and safety procedures in this manual and for following the manufacturer's instructions before beginning any work. Read, understand and follow all safety rules and operating instructions. The operator must also consider the machine's uses and limitations and the conditions at the jobsite before using this machine. Strictly following all safety requirements in this manual is critical.

Consider this manual a part of the machine, along with *Maintenance Manual* and *Parts Manual*, and always keep the manuals with the machine. The owner or administrator of the machine shall offer all manuals and other necessary information provided by the machine manufacturer regarding the daily inspection and maintenance to each of the renters. If the machine is sold, the owner or administrator must pass along the manuals and other necessary information to the purchaser. The owner or administrator of the machine shall also provide the manufacturer's maintenance information to the person responsible for maintaining the machine.

If you have any questions, contact Hunan Sinoboom Intelligent Equipment Co., Ltd..

This Page Intentionally Left Blank

1 MACHINE SPECIFICATIONS

Table 1-1 Specifications

Items	METRIC	IMPERIAL
Classification Description		
Product classification	3B	
Battery type	Lead-acid maintenance-free battery	
Travel drive type	DC motor	
Dimensions		
Max platform height	8.3 m	27ft 3in
Max working height	10.3 m	33ft 9.5in
Max horizontal reach	2.8 m	9ft 2in
Max horizontal working envelope	3.3 m	10ft 10in
Overall length (stowed)	2.97 m	9ft 9in
Overall width (stowed)	0.99 m	3ft 3in
Overall height (stowed)	1.99 m	6ft 6in
Wheelbase	1.2 m	3ft 11in
Wheel track	0.87 m	2ft 10.3in
Ground clearance (pothole guard stowed)	0.06 m	2.36in
Ground clearance (pothole guard deployed)	0.02 m	0.79in
Platform dimension (L×W×H)	0.99m×0.7m×1.1m	3ft 3in×2ft 3.6in×3ft 7.3in
PERFORMANCE PARAMETERS		
Platform rated capacity	200 kg	440 lb
Platform max occupancy (indoor/ outdoor)	2 persons/1 person	
Drive speed (stowed)	0 ~ 4 km / h	0 ~ 2.5 mph
Drive speed (raised)	0 ~ 0.6 km / h	0 ~ 0.37 mph
Platform lift time (no load)	32 ~ 36 s	
Platform lower time (no load)	32 ~ 37 s	
Gradeability	25%	
Platform rotation angle	345°	
Max allowable inclination (front to back/left to right)	3°/ 3°	

Table 1-1 Specifications (continued)

Items	METRIC	IMPERIAL
Turning radius (inner/outer)	0 m/1.55 m	0 ft/5ft 1in
Turntable tailswing	0 m	0 ft
Max operating noise level	72 dB	
Tire spec(diameter×width/type)	406×127mm/solid	16×5in/solid
Load cycles	40000 cycles	
POWER PARAMETERS		
Drive×Steer	2 WD×2 WS	
Power unit motor (voltage/power)	24 V DC/4 kW	
Hydraulic tank capacity	8 L	2.9 gal (UK)/3.4 gal (US)
Hydraulic system pressure	15 MPa	2175 psi
Battery (voltage, capacity, rate of discharge)	24 V, 220 Ah, 20hr	
System voltage	24VDC	
Control voltage	24VDC	
Charger (input voltage/output current)	100 ~ 240 V AC/30 A	
Drive motor (voltage/power)	24 V DC/0.85 kW	
WEIGHT		
Gross weight (no load)	2678 kg	5904 lb
FLOOR LOADING INFORMATION		
Max tire load	1200 kg	2646 lb
Pressure against ground	1180 kPa	171 psi
ENVIRONMENT REQUIREMENT		
Max allowable manual force (indoor/ outdoor)	400N/200N	90 lbf/45 lbf
Max allowable wind speed (indoor/ outdoor)	0 m / s / 12.5 m / s	0 mph / 28 mph
Max allowable altitude	1000 m	3281 ft
Allowable ambient temperature (lead-acid battery)	-10℃ ~ 40℃	14℉ ~ 104℉
Allowable ambient temperature (- lithium battery)	-20℃ ~ 40℃	-4℉ ~ 104℉
Max allowable RH	90%	

Table 1-1 Specifications (continued)

Items	METRIC	IMPERIAL
Storage environment	Stored at -20℃ to 50℃ (-4℉ to 122℉) in a well-ventilated environment with 90% relative humidity (20℃ [68℉]), and away from rain, sun, corrosive gas, inflammables and explosives.	

Notes:

1. The platform height plus the operator height (assumed to be 2 m/6 ft 7 in) equals the working height.
2. The ground bearing information is approximate, without considering different options, thus it is applicable only when taking an adequate safety factor into account.
3. Different regions should use hydraulic oil, engine oil, coolant, fuel, lubricating oil, etc., that are suitable for the environmental temperature requirements.
4. In cold weather, auxiliary devices are needed to start the machine.
5. Rated platform load capacity refers to the maximum allowable load on the platform, including the weight of persons, materials, tools, accessories and other objects. The mass of one person shall be taken as 80 kg (176 lb).
6. Lead-acid batteries are not recommended for use in environments below 0°C (32°F). Operating below this temperature will cause rapid degradation of battery performance, affecting the machine's endurance.
7. The hydraulic oil tank capacity refers to the maximum internal volume of the tank.

Chart of working envelope

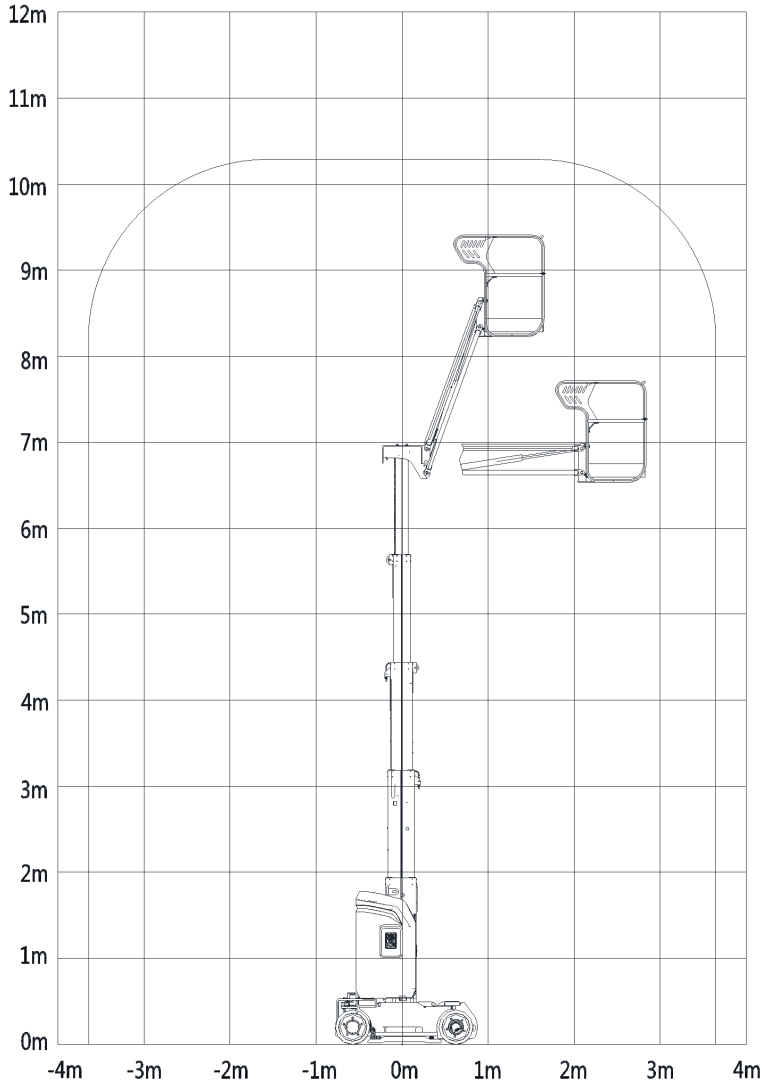

Figure 1-1 Chart of working envelope

2 MACHINE COMPONENTS

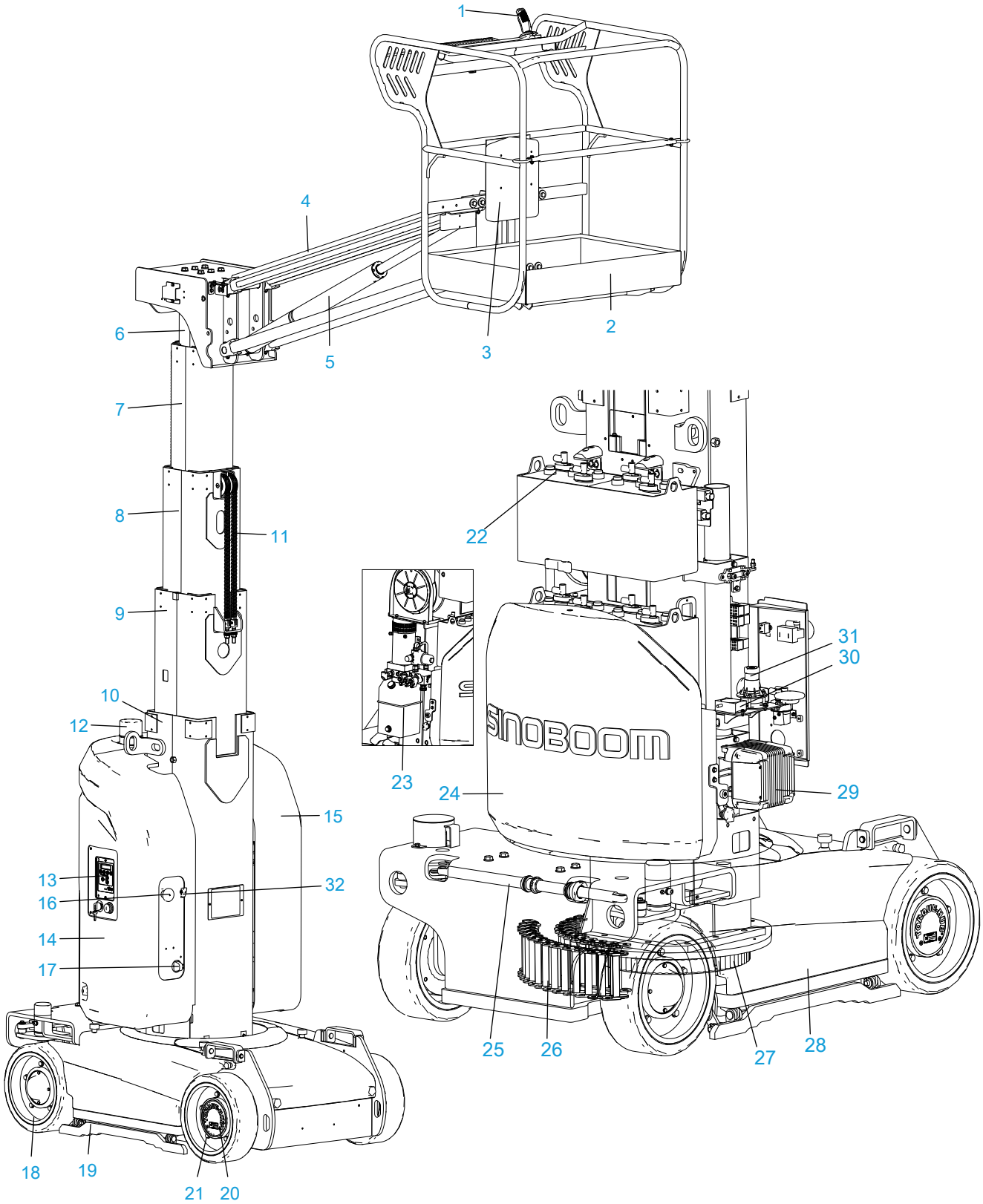

Figure 2-1

Table 2-1

1. Platform controls	**12.** Warning light	**23.** Power unit
2. Work platform	**13.** Ground controls	**24.** Counterweight
3. Manual storage container (optional)	**14.** Turntable cover, LH	**25.** Steering cylinder
4. Jib boom	**15.** Turntable cover, RH	**26** Cable track
5. Jib boom cylinder	**16.** Power-off switch	**27.** Slewing unit
6. 4th telescopic boom	**17.** Charger plug cable	**28.** Chassis
7. 3th telescopic boom	**18.** Front steering wheel	**29.** Charger
8. 2nd telescopic boom	**19.** Pothole guard plate	**30.** Level switch
9. 1st telescopic boom	**20.** Drive reducer	**31.** Level switch
10. Base boom	**21.** Rear driving wheel	**32.** Brake release switch
11. Telescoping mechanism	**22.** Battery	

Machine positions

Stowed position:

The machine comes in stowed position when the main boom is fully retracted.

Non-operating position:

The machine remains in non-operating position when the down limit switch does not disengage.

Operating/raised position:

The machine comes in operating/raised position when the platform is raised until the down limit switch disengages.

3 SAFETY

Read, understand and comply with the safety rules and regulations of your workplace and your government.

Before using the machine, ensure the operator is properly trained and qualified in safely operating the machine. The training includes but is not limited to：

- Warning and instruction decals on the machine
- Pre-operation inspection
- Any factors that may affect the machine stability
- Common hazards and countermeasures
- Jobsite inspection
- Functions of all controls and associated knowledge, including emergency control.
- Personal protection equipment that suits the task, workplace and environment.
- Safety operation
- Transporting the machine
- Measures against unauthorized use
- Operating instructions

Understand that as the operator you have the responsibility and right to shut down the machine in case of failure with the machine or other emergency at your workplace.

NOTICE

People suffering from heart disease, hypertension, epilepsy and other diseases and people who fear heights must never operate or use this machine. Also, people who have alcohol or drugs in their system, or experience excessive fatigue or depression, are prohibited from operating or using this machine.

SAFETY DEFINITIONS

This safety alert symbol appears with most safety statements. It means attention, become alert, your safety is involved! Please read and abide by the message that follows the safety alert symbol.

⚠ DANGER

Indicates a hazardous situation that, if not avoided, *will* result in death or serious injury.

⚠ WARNING

Indicates a hazardous situation that, if not avoided, *could* result in death or serious injury.

⚠ CAUTION

Indicates a hazardous situation that, if not avoided, *could* result in minor or moderate injury.

NOTICE

Indicates a situation that can cause damage to the engine, personal property and/or the environment, or cause the equipment to operate improperly.

NOTE: Indicates a procedure, practice or condition that should be followed in order for the engine or component to function in the manner intended.

REPORTING ACCIDENTS

In case of any accident involving the machine of Hunan Sinoboom Intelligent Equipment Co., Ltd., notify Hunan Sinoboom Intelligent Equipment Co., Ltd. immediately, even if no personal injury or property damage occurs in the accident. Contact Hunan Sinoboom Intelligent Equipment Co., Ltd. by telephone and provide all necessary details. Failure to notify the manufacturer within 48 hours of the incident involving the machine of Hunan Sinoboom Intelligent Equipment Co., Ltd. may void the product's warranty.

NOTICE

Thoroughly inspect the machine and all its functions after any accident. Make sure to test it first from the ground controller and then from the platform controller. Ensure the machine's lifting height does not exceed 3 m (9.8 ft) until all damage has been repaired and all controllers operate properly.

ELECTROCUTION HAZARDS

NOTE: This machine is not insulated and does not have an electric shock protection function.

All operators and managers shall comply with national or local regulations regarding the minimum safe distance of live conductors above the ground. In the absence of such requirements, operators and managers should follow the minimum safety distance requirements in ***Table 3-1 Minimum Safe Distance, page 3-2***.

⚠ WARNING

ELECTRICAL SHOCK HAZARDS

- **Always maintain a safe distance from power lines and electrical equipment in accordance with applicable government regulations and see *Table 3-1 Minimum Safe Distance, page 3-2*.**
- **Consider platform and boom movement, wire swinging or drooping, beware of strong winds or gusts, and do not operate the machine when there is lightning or heavy rain.**
- **If the machine comes into contact with live wires, keep away from the machine. Personnel on the ground or on the platform must not touch or operate the machine until the power is switched off.**
- **Do not use the machine as a ground wire during welding and polishing operations.**

Table 3-1 Minimum Safe Distance

Voltage (Phase to Phase, kV)	Minimum safe distance (m/ft)
0-50	3.05 (10)
50-200	4.60 (15)
200-350	6.10 (20)
350 -500	7.62 (25)
500 -750	10.67 (35)
750 -1000	13.725 (45)

TIPPING HAZARDS AND RATED LOAD

Maximum rated load bearing capacity of the platform:200kg (440lb)

⚠ WARNING

TIPPING HAZARDS

- **Personnel, equipment and materials on the platform must not exceed the maximum load capacity.**
- **Only raise or extend the mast when the machine is on solid, level ground.**
- **Select only the low speed when driving the machine on a slope.**
- **Do not use the tilt alarm as a level indicator. The tilt alarm on the platform will sound only if the machine is heavily tilted.**
- **Carefully lower the platform and move the machine to a firm level surface. Do not rotate the turntable while the lowering the mast. Any unauthorized modification of the level or limit switches is strictly forbidden.**
- **Do not drive faster than 0.6 km/h (0.37 mph) when the platform is raised.**
- **When the platform is raised, the machine cannot travel on uneven terrain, unstable surfaces or in other dangerous conditions.**
- **Do not operate the machine during strong winds or gusts, and do not increase the surface area of the platform or load. Increasing the area exposed to the wind will reduce the stability of the machine.**
- **When the machine is on rough ground, with gravel or other uneven surfaces, or near holes and steep slopes, maintain a minimum distance of 0.6m (2ft) and reduce the speed.**
- **When on the platform do not push and pull objects outside of it. The maximum lateral force allowed is:400 N (90 lbf).**
- **Tow the machine only from the tiedown/lifting points on the chassis.**
- **Never use the mast or platorm to stablize or support any objects outside of the machine.**

⚠ WARNING

TIPPING HAZARDS

- **Do not change any machine parts that may affect safety and stability.**
- **Do not replace key parts that affect machine stability with different weights or specifications.**
- **Do not modify or change moving aerial platforms without the manufacturer's prior written permission.**
- **On the platform, do not attach an additional device for placing tools or other materials to the guardrail. This will increase the platform weight, surface area and load.**
- **Do not place on, or fasten any overhanging load to any part of this machine.**
- **Do not place ladders or scaffolding on the platform or any parts of the machine.**
- **Do not use the machine on a moving or active surface or on a vehicle. Ensure all tires are in good condition, the slotted nuts tightened and the cotter pins complete.**
- **Do not use a battery that weighs less than the original one(30kg[66 lb], and do not remove or modify the counterweight or other parts of the battery box. The battery not only provides power, it also serves as a counterweight. The battery is vital to maintaining the stability of the machine.**
- **Do not use the platform or mast/ boom to push other machines or objects.**
- **Do not let the platform or mast/ boom touch the nearby structures.**
- **Do not tie off the platform with rope or other binding materials to the nearby structures.**
- **Do not put a load outside the platform.**
- **When the platform is caught or stuck or when other objects in the vicinity impede its normal movement, do not use the**

⚠ WARNING

TIPPING HAZARDS

platform controller to lower the platform. If you intend to lower the platform with a ground controller, you must operate it only after all personnel have left the platform.

WORK ENVIRONMENT HAZARDS

⚠ WARNING

UNSAFE JOBSITE HAZARDS

- **Do not operate the machine on surfaces, edges or potholes that cannot bear the weight of the machine. Raise or extend the boom only when the machine is on firm, flat ground.**
- **Never travel on uneven terrain or unstable surfaces or in other dangerous conditions when raising the platform.**
- **When the machine is on rough ground, with gravel or other uneven surfaces, or near holes and steep slopes, maintain a minimum distance of 0.6m (2ft) and reduce the speed.**
- **Do not use the tilt alarm as a horizontal indicator. The tilt alarm on the platform will sound only when the machine is heavily tilted. If the tilt alarm sounds:**
  - **Carefully lower the platform and move the machine to firm level surface. Do not rotate the turntable while lowering the mast. Do not modify the level or limit switches.**

- **Do not drive the machine exceeding 0.6 km/h (0.37 mph) with platform raised.**
- **If the machine can be used outdoors, never operate it during strong winds or gusts. Do not lift the platform when the wind speed exceeds 12.5 m/s (28 mph). If the wind speed exceeds 12.5 m/s (28 mph) after the platform is lifted, fold the platform and do not continue to operate the machine.**
- **Do not use any device that may increase the wind load on the machine.**
- **Do not drive or lift the machine on slopes, steps or vaulted surfaces that exceed the maximum gradeability of the machine.**

⚠ WARNING

UNSAFE JOBSITE HAZARDS

- **Do not raise the platform when the machine is on the slope greater than 3°.**

Before or during machine operation, check the jobsite for possible hazards and beware of the environmental restrictions, including flammable and explosive gas/ dust. If the machine is to be used in any other applications, or by any other means, other than those specified by **Sinoboom**, it must be approved or guided by the manufacturer.

Table 3-2

BEAUFORT NUMBER	METERS/ SECOND	MILE/ HOUR	DESCRIPTI-ON	GROUND CONDITION
0	0 ~ 0.2	0 ~ 0.5	Calm	Calm. Smoke rises vertically.
1	0.3 ~ 1.5	1 ~ 3	Light air	Wind motion visible in smoke.
2	1.6 ~ 3.3	4 ~ 7	Light breeze	Wind felt on exposed skin. Leaves rustle.
3	3.4 ~ 5.4	8 ~ 12	Gentle breeze	Leaves and smaller twigs in constant motion.
4	5.5 ~ 7.9	13 ~ 18	Moderate breeze	Dust and loose paper rise. Small branches begin to move.
5	8.0 ~ 10.7	19 ~ 24	Fresh breeze	Smaller trees sway.
6	10.8 ~ 13.8	25 ~ 31	Strong breeze	Large branches in motion. Flags waving near horizontal. Umbrella use becomes difficult.
7	13.9 ~ 17.1	32 ~ 38	Near gale/ moderate gale	Whole trees in motion. Effort needed to walk against the wind.
8	17.2 ~ 20.7	39 ~ 46	Fresh gale	Twigs broken from trees. Cars veer on road.
9	20.8 ~ 24.4	47 ~ 54	Strong gale	Light structure damage.

NOTICE

Maximum gradeability is applicable for machines with platform retracted.

Gradeability means the maximum allowable tilt angle of the machine when it is on solid ground and the platform is only capable of carrying one person. As the weight of the machine's platform increases, the machine's climbing capacity reduces.

Maximum gradeability:

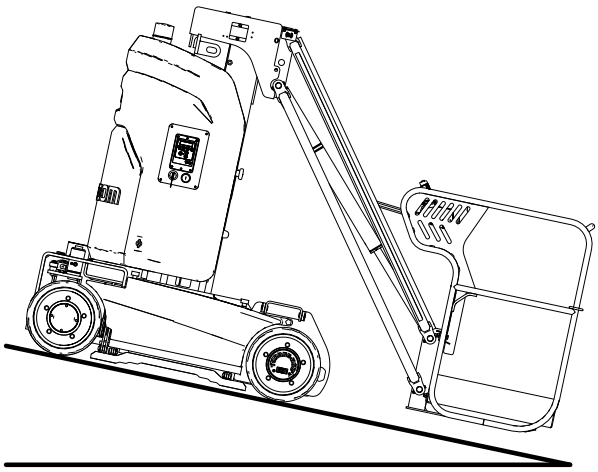

Slope rating: 25%/14°

UNSAFE OPERATION HAZARDS

The machine must be operated in strict compliance with the requirements as contained in the Operation Manual and the Maintenance Manual, as well as the applicable industry or local regulations, whichever is more stringent.

Do not use the machine in the following situations:

- Unrelated personnel/equipment is present in the working envelope of the machine.
- Use as a crane (except the custom-made ones with such functions).
- Use on the truck, trailer, tracked vehicle, ship, scaffold and the like without written consent by the manufacturer or a qualified professional.
- Improper securing of the machine to another object by just sitting it against, fastening or binding.
- Stunt or imprudent use of the machine.
- Overloaded or over-moment situation.
- Other situations as specified in the Operation Manual and the Maintenance Manual.

⚠ WARNING

UNSAFE OPERATION HAZARDS

- **Do not push any object outside the platform. The maximum side force allowed is 400N (90 lbf) for indoor use and 200N (45 lbf) for outdoor use.**

- **Tow the machine only from the tie-down/lifting points on the chassis.**
- **Never use the mast/boom or platform to stabilize or support any objects outside of the machine.**
- **Do not modify any component that may affect the machine safety and stability.**
- **Do not replace key parts that affect machine stability with parts of different weights or specifications.**

- **Do not change or modify moving aerial platforms without the manufacturer's written permission.**
- **On the platform, do not attach an additional device for placing tools or other materials to the guardrail. This will increase the platform weight, surface area and load.**

- **Do not put ladders or scaffolding on the platform or any part of this machine.**
- **Do not use additional devices to increase the working height of the machine.**
- **Do not use the machine on any mobile or movable surface or vehicle. Ensure all tires are in good condition, the slotted nuts tightened and the cotter pins complete.**
- **Do not use a battery that weighs less than the original one (30kg [66 lb]), and do not remove or modify the counterweight or other parts inside the battery box. The battery not only provides power, but also serves as a counterweight. The battery is vital to maintaining the stability of the machine.**

⚠ WARNING

UNSAFE OPERATION HAZARDS

- **Do not place or attach any suspended load onto any part of the machine.**
- **Do not use the machine as a crane.**
- **Do not use the platform or boom to push the machine or other objects.**
- **Do not allow the platform or mast/boom to touch structures.**
- **Do not use ropes or other binding materials to tie the platform or mast/boom onto nearby structures.**
- **Do not put the load outside the platform.**
- **When the platform is caught or stuck or when other objects in the vicinity impede its normal movement, do not use the platform controller to lower the platform. If you intend to lower the platform with the ground controller, you must operate it only after all personnel have left the platform.**
- **When one or more of the machine's tires are off the ground, evacuate all personnel before attempting to stabilize the equipment. Use a crane, forklift or other suitable equipment to stabilize the machine.**

FALL HAZARDS

The machine must be operated in strict compliance with the requirements as contained in this manual and the maintenance manual, as well as the applicable industry or local regulations, whichever is more stringent.

⚠ WARNING

FALL HAZARDS

- **Each person on the platform must wear harnesses or use safety equipment consistent with government regulations. Fasten the cable to the fixed point of the platform. Never fasten the cable of more than one person to a fixed point on the platform.**
- **Do not sit, stand or crawl on the guardrails. When on the platform always remain standing on the platform floor.**
- **Do not enter or exit the platform through the mast/boom.**
- **Keep the platform floor free of obstacles.**
- **Do not allow mud, oil stains, grease or other slippery substances reside on the footwear or platform floor.**
- **Do not enter or exit the platform unless the machine is fully in stowed position.**
- **Close the platform entry door before operating the machine.**
- **Do not operate the machine if the handrails are not properly installed and the platform entry door is not closed.**

COLLISION HAZARDS

At a minimum, operators must operate and maintain the machine as stated in the *Operation Manual* and the *Maintenance Manual* in addition to following more stringent industry regulations and workplace rules.

⚠ WARNING

COLLISION HAZARDS

- **Pay attention to the field of sight and the presence of blind spots when moving or operating the machine.**
- **The non-staff must maintain a minimum of 2m (6.6ft) distance from the machine while it is travelling or swinging.**

- **When the work platform of a moving machine is approx2m (6.6ft) away from the obstructions, use the boom lift function (rather than the drive function) to get close to the obstructions.**
- **Switch to the low speed gear before parking the machine that drives at high speed.**

- **Do not use the high speed gear when the machine is driving reverse or in restricted or enclosed work area.**
- **Check the work area to avoid ground and overhead obstructions or other possible risks.**

- **Be sure to exercise caution when using the platform and ground controls. Color-marked directional arrows show the function of travel, lift and steering.**
- **Users must comply with user, workplace and government rules regarding the use of personal protective equipment (hard hats, safety belts and gloves, etc.).**
- **Place the machine on level ground or in a secured position before releasing the brakes.**
- **Only lower the platform when there are no people or obstructions in the area beneath it.**
- **When the machine is conducting aerial work, warn the staff/non-staff not to work, stand or walk under the raised boom or platform.**
- **Limit the speed of travel according to ground conditions, crowding, gradients, the presence and location of personnel and any other factors that may cause collisions.**
- **Do not operate the machine on any crane or overhead traveling device unless the crane control is locked or precautions have been taken to prevent any potential collision.**
- **Keep the machine away from any stationary objects (buildings etc.) or mobile objects (vehicles, cranes etc.).**
- **Never operate a machine dangerously or for fun.**

⚠ WARNING

COLLISION HAZARDS

CRUSH HAZARDS

A potential crush hazard exists during movement of the machine. Always keep body parts and clothing a safe distance from the machine during machine operation.

⚠ WARNING

CRUSH HAZARDS

- **Do not place your hands and arms where they may become crushed or trapped.**
- **Do not work under the platform or the boom when the boom is not protected by a crane.**
- **Maintain good judgment and planning when using the controller on the ground to operate the machine. Maintain proper distance between operator, machine and fixed object.**

EXPLOSION AND FIRE HAZARDS

⚠ WARNING

EXPLOSION AND FIRE HAZARDS

- **Do not use the machine or charge the battery in hazardous or potentially flammable or explosive atmospheres.**
- **For the engine-powered machines, never add fuel while the engine is still running, and only add fuel when the place is well ventilated and free of flame, spark or any other hazards that may cause explosion.**
- **Never spray ether on the engine equipped with glow plug.**

DAMAGED MACHINE HAZARDS

NOTICE

To avoid machine damage, follow all operation and maintenance requirements in the Operation Manual and the Maintenance Manual.

⚠ WARNING

UNSAFE OPERATION HAZARDS

- **Do not use the machine if it is damaged or not in proper operating condition.**
- **Thoroughly inspect and test for all functions of the machine before use. Immediately stop and mark damaged or faulty machines and then contact the manufacturer.**
- **Ensure that all maintenance operations have been performed in accordance with the *Operation Manual* and the *Maintenance Manual*.**
- **Make sure all labels are in place and are legible.**
- **Ensure that the *Operation Manual* and *Maintenance Manual* are sound, easy to read and stored in the storage compartment on the platform.**

BODILY INJURY HAZARDS

Always follow all operation and maintenance requirements in this manual and the Maintenance Manual.

⚠ WARNING

BODILY INJURY HAZARDS

- **Do not operate the machine when there are oil spills/leaks. Oil spills or leaks in hydraulic fluids may penetrate and burn the skin.**

NOTE: The operator must perform the maintenance during the pre-operation inspection. Only trained service personnel can open the covers to repair the machine.

BATTERY HAZARDS

⚠ WARNING

FIRE AND EXPLOSION HAZARD

- **Batteries contain sulfuric acid and generate explosive mixtures of hydrogen and oxygen gases. Keep any device that may cause sparks or flames (including cigarettes/smoking materials) away from the battery to prevent explosion.**
- **Do not touch the battery terminals or cable clips with tools that may cause sparks.**
- **Avoid charging the battery in direct sunlight.**
- **The battery shall be charged at a well-ventilated place.**
- **In case of heating, deformation, leakage, abnormal smell or smoke during the use of the battery, stop using the battery and place the battery in an open place away from the crowd.**
- **Do not throw the battery into the fire or heater.**

⚠ WARNING

ELECTRICAL SHOCK HAZARDS

- **Contact with live circuits may lead to death or serious injury. Always wear protective glasses or goggles and protective clothing**
- **Remove all rings, watches and other accessories.**

⚠ WARNING

CHEMICAL BURN HAZARD

- **Avoid spilling or contacting battery acid with unprotected skin. Seek medical attention immediately if battery acid contacts skin.**
- **Should the battery acid spill out, use bicarbonate (baking soda) mixed with water to neutralize the acid.**

⚠ WARNING

BATTERY HAZARD

- **Be sure to read and follow the recommendations given by the battery manufacturer regarding how to correctly use and maintain the battery.**
- **The battery charger can only be connected to the grounded three-plug AC power socket. Ensure that the charger is in normal working state before charging.**
- **Please use the charger provided by the manufacturer to charge the battery.**
- **The battery is only applicable for its matched equipment. Do not use the battery in other cases.**
- **Only the properly trained personnel authorized by the workplace are allowed to remove the battery from the machine.**
- **Before replacing the battery, be sure to identify the appropriate number of personnel and the lifting method.**
- **Do not allow sharp objects to contact with the battery, otherwise the battery membrane will easily get damaged.**
- **Other objects and tools shall not be placed on the battery to prevent short circuit of the battery.**
- **Please always keep the battery upright. If the battery is placed sideways or obliquely, the liquid in the battery may overflow.**
- **Do not short circuit the positive and negative poles of the battery.**
- **Do not use the battery with the positive or negative poles installed inversely.**
- **Do not directly connect the battery to a power outlet.**
- **Do not knock, throw or step on the battery.**
- **Do not immerse the battery into the water, acidic, alkaline and salt-containing solutions. Keep the battery away from rain.**
- **Never modify the battery system to avoid serious accidents.**

⚠ WARNING

BATTERY HAZARD

- **Turn off the main power switch on the battery if the machine is unused for a long time.**
- **Waste batteries may cause danger. Please do not discard them at will. Please contact the battery recycling company for discarding.**
- **Non-professional personnel are not allowed to repair and maintain the system, otherwise personal injury or battery damage may be caused.**
- **Non-professional personnel are not allowed to modify parameters and detect signal lights when the system is operating, otherwise personal injury or battery damage may be caused.**
- **Non-professional personnel are not allowed to dismantle the battery case, otherwise damage may be caused.**

NOTICE

The battery capacity attenuation and failure caused by over-discharge (continued use with less than 10% power) or power loss from long-term non-charging (-failure to charge in time for more than 3 days with less than 10% power) due to customer's errors are not covered by the warranty.

WELDING AND POLISHING REQUIREMENTS

Before welding, grinding and polishing operations, always ensure you read and understand all operation and maintenance requirements in the *Operation Manual* and the *Maintenance Manual*.

⚠ WARNING

WELDING HAZARDS

- **Comply with the welder manufacturer's recommendations for procedures concerning proper use of the welder.**
- **Welding leads or cables may only be connected after turning off the power unit.**
- **Carry out welding operations only after the welding cable has been correctly connected.**
- **Do not use the machine as a ground wire during welding operation.**
- **At all times, make sure that the power tools are completely stored in the working platform. Do not hang the power tools on the railing of the working platform or the work area outside the working platform, or hang the power tools directly by the wire.**

Before performing welding, grinding and polishing work, welders must seek permission of the responsible department at the workplace.

LOCKOUT AFTER EACH USE

1. Choose a safe parking location that is on sturdy, level ground and that is free of obstructions and heavy traffic.
2. Lower the mast to stowed position.
3. Push in the emergency stop button at ground controls to the OFF position.
4. Push in the emergency stop button at platform controls to the OFF position.
5. Turn the key switch at the ground controls to OFF position and remove the key to avoid unauthorized operation of the machine.
6. Turn off the power disconnect switch.
7. Charge the battery.

NOTICE

After using the machine, the power disconnect switch must be turned off.

4 JOBSITE INSPECTION

⚠ WARNING

UNSAFE OPERATION HAZARD

Be sure to follow the instructions and safety rules in this manual. Failure to follow the instructions and safety rules in this manual may result in death or serious injury.

Do not operate this machine unless you have learned and practiced the rules for safely operating the machine as stated in this manual.

- **Know and understand the safety rules before continuing the next step.**
- **Avoid dangerous situations.**
- **Always check the machine before operating.**
- **Select appropriate machinery and personal protective equipment (hard hats, safety belt and gloves, etc.) for the task.**
- **Always perform a pre-operation function test before using the machine.**
- **Check the work site.**
- **Check the safety decals/ nameplate on the machine.**
- **Only use the machine according to the instructions in this manual and for its intended purpose.**

During the jobsite inspection the operator determines whether the jobsite is suitable for safe machine operation. The operator should conduct the jobsite inspection before moving the machine to the jobsite.

Safety is the operator's responsibility. Part of safety is conducting a thorough jobsite inspection. Operators must identify and avoid workplace hazards when moving, installing and operating the machine.

Unless approved by Sinoboom, never operate the machine in a hazardous site. The following items present danger on the jobsite:

- Steep hills or caves
- Ground prominences, obstacles or debris
- Ground inclines
- Unstable or ultra-smooth surfaces
- Overhead obstacles and high-voltage wires
- Hazardous locations
- Ground surface that could fail to support the capacity of the machine and its load
- Gusts and strong winds
- Actions by unauthorized personnel
- Other possible unsafe conditions

This Page Intentionally Left Blank

5 PRE-OPERATION INSPECTION

⚠ WARNING

UNSAFE OPERATION HAZARD

Be sure to follow the instructions and safety rules in this manual. Failure to follow the instructions and safety rules in this manual may result in death or serious injury.

Do not operate this machine unless you have learned and practiced the rules for safely operating the machine as stated in this manual.

- **Know and understand the safety rules before continuing the next step.**
- **Avoid dangerous situations.**
- **Always check the machine before operating.**
- **Select appropriate machinery and personal protective equipment (hard hats, safety belt and gloves, etc.) for the task.**
- **Always perform a pre-operation function test before using the machine.**
- **Check the work site.**
- **Check the safety decals/ nameplates on the machine.**
- **Only use the machine according to the instructions in this manual and for its intended purpose.**

Before operating the machine, please first understand the tasks to be done and be aware of the following：

1. Be familiar with each function of the machine and capable of operating it adeptly.
2. Only the person authorized by the management is allowed to operate the machine.
3. Obey the safety rules in this manual, and fully understand and follow the operating instructions in this manual to operate the machine.
4. The operator should go through a professional training based on this operation manual, and should be certified as a qualified operator in operation of this machine.
5. Clearly understand all nameplates, warning and safety decals on the machine.
6. Before each operation, examine and check the operational environment, and ensure the safety protection equipment is properly in place. The safety equipment may differ according to the operational environment.
7. Before operating the machine, be sure that all control handles are returned to neutral, and all switches in the OFF position.

TIPS FOR CONDUCTING A PRE-OPERATION INSPECTION

⚠ WARNING

TIPPING HAZARD

Do not change or modify the aerial work platform without the prior written permission of the manufacturer. If an additional device is installed on the platform or guardrail for placing tools or other materials, this will increase the platform weight and surface area or increase the load.

- The operator is responsible for performing the “pre-operation inspection” and routine maintenance as stated in this manual.
- Before each shift change, the operator must conduct a pre-operation inspection to find out whether the machine has obvious problems before the operator performs a pre-operation function test.
- The pre-operation inspection also helps the operator determine whether the machine requires routine maintenance.
- Please refer to ***Inspecting Parts, page 5-2*** and check each item.
- Never use a machine that has damaged or modified parts. Mark the machine and stop using the machine if you discover damage or modifications.
- Only qualified maintenance technicians can repair the machine according to the manufacturer's regulations. After any maintenance, the operator

must perform another pre-operation inspection before conducting a pre-operation function test.

- Qualified maintenance technicians must perform regular maintenance inspections according to the requirements in the manufacturer's *Maintenance Manual*.

CONDUCTING A PRE-OPERATION INSPECTION

Before starting the machine, check whether it meets the following requirements:

- Ensure the *Operation Manual* and *Maintenance Manual* are in good condition, legible and stored in the storage container on the platform.
- Make sure all labels are legible and appropriately located.
- Check for hydraulic oil leaks and proper oil level. Add oil as needed. See ***Inspecting Hydraulic Oil Level, page 5-2***.
- Check for proper battery charge level. See ***Inspecting the Battery level, page 5-3***.
- Check whether the protective devices in use match the type of work performed and conform to relevant technical standards.

INSPECTING PARTS

Before each use or work shift,check the machine for any damaged, improperly installed, loose or lost parts and unauthorized changes:

- Electrical components, wirings,cables and safety ropes
- Hydraulic cylinders, manifolds, hydraulic hose and fittings
- Hydraulic tank
- Storage battery pack and its connection
- Drive motor & reducer, slewing motor & reducer
- Boom wear pads and extending unit
- Limit switch and hor
- Tire and rim
- Alarms and lighting (if equipped)
- Platform (including rails, floor plate, safety lock, brackets and entry door)
- Pothole guard
- Structure and welding cracks
- Nuts, bolts and other fasteners
- Personal protection equipment
- Emergency control equipment
- Operation instructions, warning and control decals

NOTICE

If damaged parts, incorrect installation or missing parts are discovered, please replace immediately and install correctly; if the fasteners are found detached or loose, please secure immediately.

INSPECTING ENTIRE MACHINE

Inspect the entire machine for:

- Cracks in a weld joint or structural part
- Dents or other damage
- Severe rust, corrosion or oxidation
- Improper twisting of steel wire ropes, electric cables, hoses inside the platform
- Missing or loose structural parts and key components, including fasteners and pins for correct positioning and tightness
- After the inspection, ensure all covers are in place and securely locked

INSPECTING HYDRAULIC OIL LEVEL

Ensuring appropriate hydraulic oil level is vital to proper operation of the machine. If too high, the oil will spill out from the oil tank during machine operation, if too low, the oil pump will suction air and damage hydraulic components. Performing daily inspection of the hydraulic oil level will help you determine if a problem exists in the hydraulic system.

Perform the following procedures with the boom in stowed position:

1. Open the right turntable cover to visually insepct the hydraulic level, the hydraulic oil level should be within the marking range of oil level indicator.

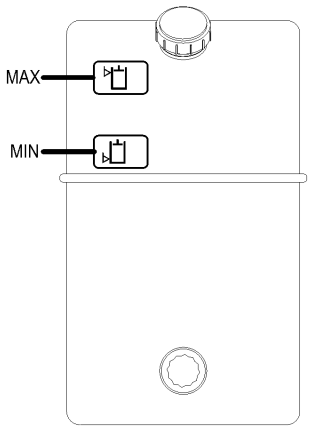

Figure 5-1

2. Ensure the hydraulic tank body and its connections are free of leaks.
3. Add oil as needed. Never overfill the tank.

Table 5-1

CUSTOMER REQUIREMENTS	HYDRAULIC OIL MARK
Normal-temperature region 0°C to 40°C (32°F to 104°F)	L-HM46
Cold region	L-HV32
-25°C to 25°C (-13°F to 77°F)	
High-temperature region greater than 40°C (104°F)	L-HM68
Extremely cold region less than -30°C (-22°F)	Special programmes need to be identified.

NOTICE

Different hydraulic oils can be added according to customer requirements upon factory delivery, but cannot be mixed.

INSPECTING THE BATTERY LEVEL

1. Pull out the emergency stop buttons at ground and platform controls to the ON position.
2. Turn the key switch at ground controls to Platoform.
3. The battery level is indicated on the display of plaform controls.

Table 5-2

PLATFORM POWER DISPLAY	POWER RATIO	DESCRIPTION
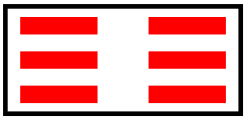	90-100%	The battery has been fully charged.
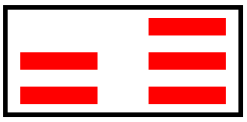	70%	The battery is at 70% of its capacity.
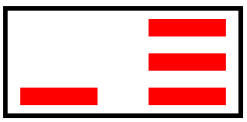	50%	The battery is at 50% of its capacity.
	30%	The battery is at 30% of its capacity.

PLATFORM POWER DISPLAY	POWER RATIO	DESCRIPTION
	20%	The battery level is at 20%, which is low. The battery requires recharging.
	10%	The battery level is at 10%, which is very low. The machine will become slow. The battery requires recharging.

NOTICE

The battery must be charged at the power ratio of approx. 20%. Do not use the battery until fully depleted.

6 PRE-OPERATION FUNCTION TEST

⚠ WARNING

UNSAFE OPERATION HAZARD

Be sure to follow the instructions and safety rules in this manual. Failure to follow the instructions and safety rules in this manual may result in death or serious injury.

Do not operate this machine unless you have learned and practiced the rules for safely operating the machine as stated in this manual.

- **Know and understand the safety rules before continuing the next step.**
- **Avoid dangerous situations.**
- **Always check the machine before operating.**
- **Select appropriate machinery and personal protective equipment (hard hats, safety belt and gloves, etc.) for the task.**
- **Always perform a pre-operation function test before using the machine.**
- **Check the work site.**
- **Check the safety decals/ nameplate on the machine.**
- **Only use the machine according to the instructions in this manual and for its intended purpose.**

Conducting a pre-operation function test helps you discover potential problems before you start using the machine. The operator must test all machine functions according to the instructions in this manual.

Do not use a machine with problems or malfunctions. Mark the machine and do not use it if you discover any problems. Only qualified maintenance technicians can repair the machine according to the manufacturer's regulations.

After any maintenance, the operator must perform another pre-operation inspection before conducting a pre-operation function test.

PREPARING FOR A PRE-OPERATION FUNCTION TEST

NOTICE

All the pre-operation function tests must be completed within the same period..

Before beginning a pre-operation function test:

1. Select a test area that has a solid, flat, level surface.
2. Ensure the test area is free of obstacles.
3. Connect the battery to the machine if it is not already connected.

GROUND CONTROLLER

NOTICE

All function tests of ground controller must be completed within a cycle.

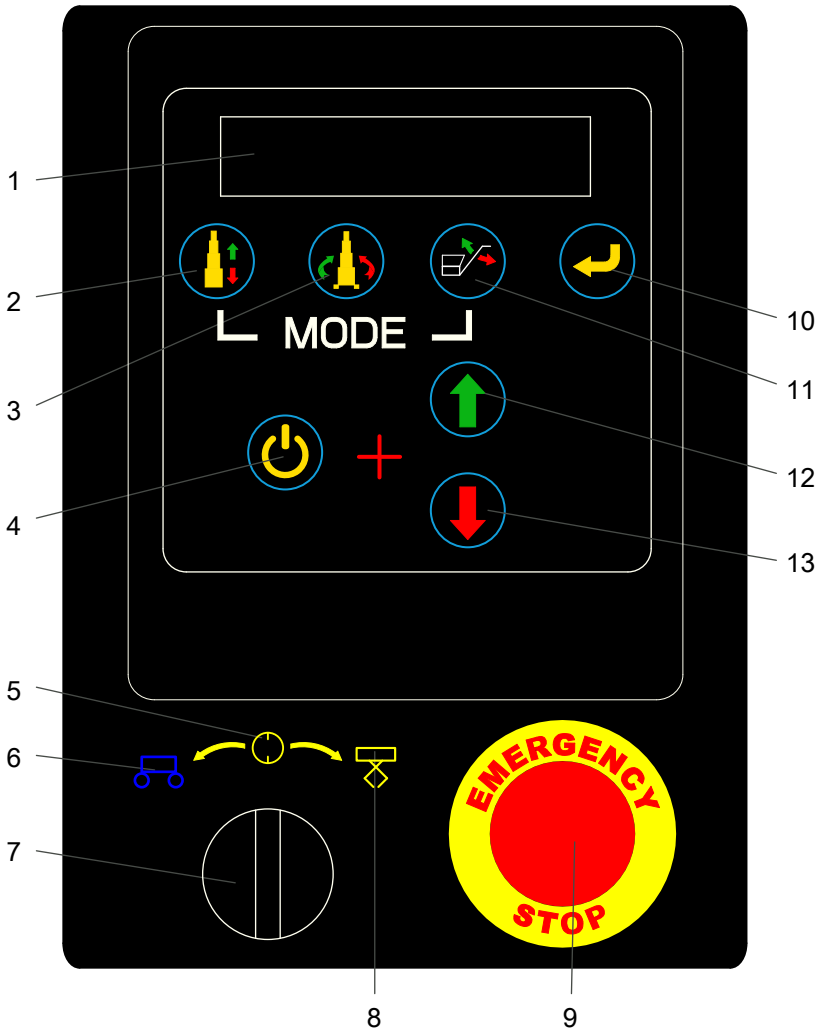

Figure 6-1 Ground controller

Table 6-1

1. Display	**6.** Ground control position	**11.** Jib boom up/down function button
2. Mast up/down function button	**7.** Key switch (ground/platform control select switch)	**12.** Up/rotate left control button
3. Turntable rotate function button	**8.** Platform control position	**13.** Down/rotate right control button
4. Enable switch	**9.** Emergency stop button	
5. OFF position	**10.** Key for display menu	

⚠ WARNING

UNSAFE OPERATION HAZARD

- **Unless in emergency situations, never operate from the ground controller if there are still persons on the platform.**
- **Never operate the machine if any control handle or switch that controls the platform movement is not returned to the OFF position after being released.**

⚠ WARNING

COLLISION HAZARD

Before operating the boom, ensure the area near or under the platform is clear of persons or obstructions.

Preparation

1. Turn the key switch at ground controller to the ground control position.
2. Pull out the emergency stop button at ground controller to ON position.
3. Be sure the associated indicator lights are on and no alarm messages shown on the display.

Emergency stop button

1. Push in the emergency stop button at ground controller to OFF position, all functions should not operate.
2. Pull out the emergency stop button at ground controller to ON position.

Key switch (ground/platform control select switch)

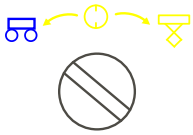

1. Turn the key switch at ground controller to the ground control position, all functions shall operate only at the ground controller, the platform controller is inoperative.
2. Turn the key switch at ground controller to the platform control position, all functions shall operate only at the platform controller, the ground controller is inoperative.

Function button

Push the function button before activating the associated function, otherwise the function should not operate.

Enable button

1. Do not press and hold the enable button, directly push the function control button, the associated function should not operate.
2. Simultaneously press and hold the enable button and the control button, the associated function should operate.

Mast up/down

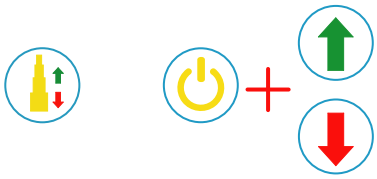

1. Push the mast up/down function button.
2. Simultaneously press and hold the enable button and the up/rotate left control button,the mast should raise smoothly without abnormal noises.
3. Simultaneously press and hold the enable button and the down/rotate right control button, the mast should lower smoothly without abnormal noises, and the buzzer should sound.

NOTICE

This machine uses spiral coils for ground and platform communication cable, which, after stretched for a long time, will become less flexible. To facilitate the spiral coils returning to its specified position normally during platform lowering, if the machine has been in the operating position for more than 3h, the platform shall be lowered in stages, that is, wait 5 - 10 s for every lowering height of 1 m (3.3 ft). Make sure the boom is in stowed position when the machine is not in use.

Turntable rotate

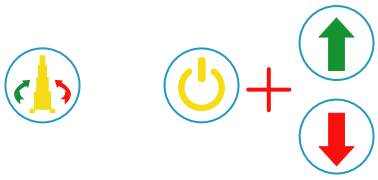

1. Push the turntable rotate function button.
2. Simultaneously press and hold the enable button and the up/rotate left control button, the turntable should rotate left.
3. Simultaneously press and hold the enable button and the down/rotate right control button, the turntable should rotate right.

Jib boom up/down

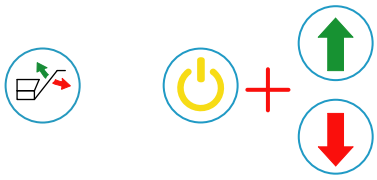

1. Push the jib boom up/down function button.
2. Simultaneously press and hold the enable button and the up/rotate left control button, the jib boom should raise.
3. Simultaneously press and hold the enable button and the down/rotate right control button, the jib boom should lower.

TESTING PLATFORM CONTROLLER (DTC SYSTEM)

NOTICE

All tests of the platform controller should be completed in one cycle.

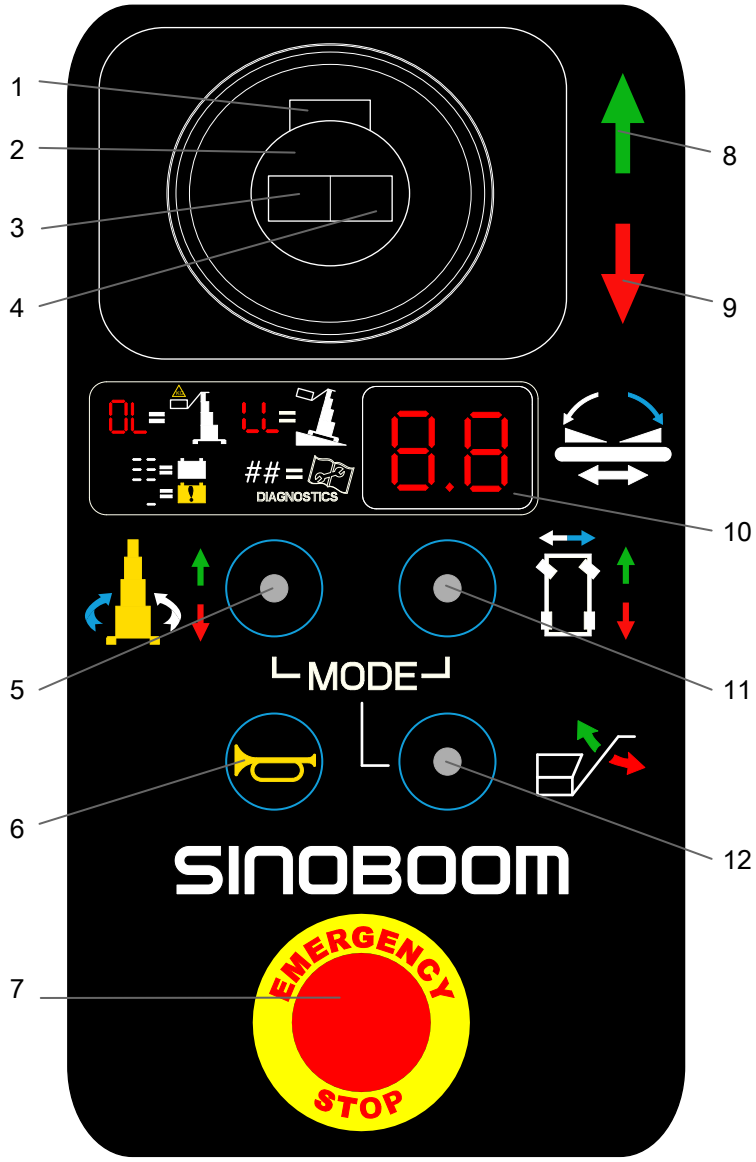

Figure 6-2 Platform controller

Table 6-2

1. Enable button	**5.** Main boom lift/turntable rotate function button	**9.** Drive reverse/lower direction arrow
2. Joystick	**6.** Horn button	**10.** Display
3. Rocker switch for turntable rotate left/wheel steer left functions	**7.** Emergency stop button	**11.** Drive function button
4. Rocker switch for turntable rotate right/wheel steer right functions	**8.** Drive forward/lift direction arrow	**12.** Jib boom lift function button

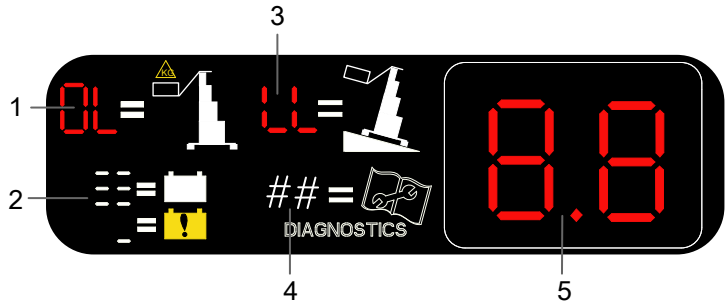

Figure 6-3 Platform controller display

Table 6-3

1. Overload symbol (OL)	**3.** Tilt symbol (LL)	**5.** Alarm display
2. Battery level symbol	**4.** Fault code	

⚠ WARNING

UNSAFE OPERATION HAZARD

- **Unless in emergency situations, never operate the machine with the ground controller if there are still persons on the platform.**
- **Confirm if the joystick is in the Neutral position before pushing in the emergency stop button at the platform controller, and if not, do not operate the machine to avoid accidents.**
- **Never operate the machine if any joystick or switch that controls the platform movement does not return to the OFF position after being released, or else personal injuries may result.**

⚠ WARNING

COLLISION HAZARD

Before operating the boom, ensure the area near or under the platform is clear of persons or obstructions.

Preparation

1. Turn the key switch on the ground controller to the platform control position.
2. Pull out the emergency stop buttons on the ground and platform controllers to ON position.
3. Make sure that the associated indicator lights are on and no alarm messages are shown on the display.

Emergency stop button

1. Push in the emergency stop button on the platform controller to OFF position, and then all functions should not work.
2. Pull out the emergency stop button on the platform controller to ON position.

Horn button

Push the horn button, the horn should sound to alert personnel around.

Function button

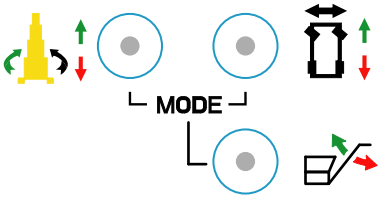

Push the function button before activating the associated function, otherwise the function will not work.

Enable button

1. Directly push the joystick without pressing and holding the enable button on the joystick, the associated function will not work.
2. Press and hold the enable button while pushing the joystick, the associated function will work.

Main boom up/down

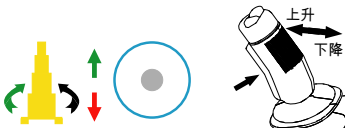

1. Push the main boom lift/turntable rotate function button.
2. Press and hold the enable button on the joystick, slowly push forward the joystick, the main boom should rise smoothly without abnormal noises.
3. Press and hold the enable button on the joystick, slowly pull backward the joystick, the main boom should descend smoothly without abnormal noises, and the buzzer should sound.

Note: The main boom lifting/lowering speed is in direct proportion to the joystick stroke.

NOTICE
This machine uses spiral coils for ground and platform communication cable, which, after stretched for a long time, will become less flexible. To facilitate the spiral coils returning to its specified position normally during platform lowering, if the machine has been in the operating position for more than 3h, the platform shall be lowered in stages, that is, wait 5 - 10 s for every lowering height of 1 m (3.3 ft). Make sure the boom is in stowed position when the machine is not in use.

Turntable rotate

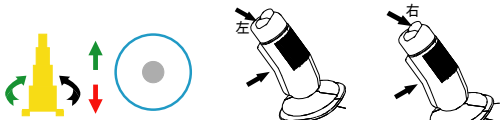

1. Push the main boom lift/turntable rotate function button.
2. Press and hold the enable button on the joystick, and press on the left side of the rocker switch on top of the joystick, the turntable should rotate counterclockwise.
3. Press and hold the enable button on the joystick, and press on the right side of the rocker switch on top of the joystick, the turntable should rotate clockwise.

Jib boom up/down

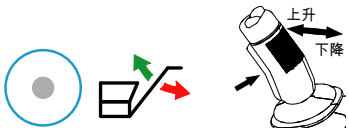

1. Push the jib boom lift function button.
2. Press and hold the enable button on the joystick, and slowly push forward the joystick, the jib boom should rise.
3. Press and hold the enable button on the joystick, slowly pull backward the joystick, the jib boom should descend.

Drive function

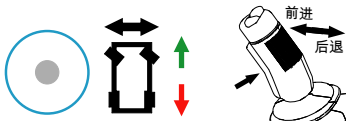

1. Push the drive function button.
2. Press and hold the enable button on the joystick, slowly push forward the joystick, the machine should drive forward.
3. Release the joystick, the machine should come to an immediate stop.
4. Press and hold the enable button on the joystick, slowly pull backward the joystick, the machine should drive reverse.
5. Release the joystick, the machine should come to an immediate stop.

Note: The drive speed is in direct proportion to the joystick stroke.

Steer function

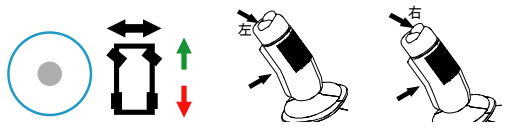

1. Push the drive function button.
2. Press and hold the enable button on the joystick, and press on the left side of the rocker switch on top of the joystick, the machine should steer left.
3. Press and hold the enable button on the joystick, and press on the right side of the rocker switch on top of the joystick, the machine should steer right.

PLATFORM CONTROLLER (SINOBOOM SYSTEM)

NOTICE

All tests of the platform controller should be completed in one cycle.

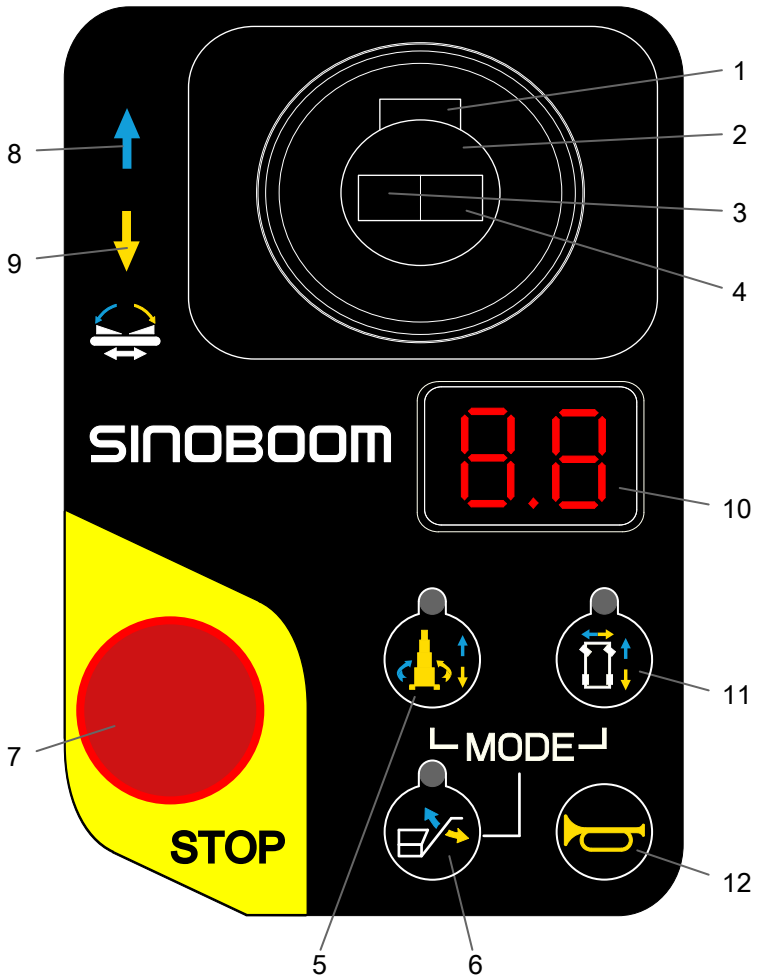

Figure 6-4 Platform controller

Table 6-4

1. Enable button	**5.** Main boom lift/turntable rotate function button	**9.** Drive reverse/lower direction arrow
2. Joystick	**6.** Jib boom lift function button	**10.** Display (for battery level and fault codes)

3. Rocker switch for turntable rotate left/wheel steer left functions	**7.** Emergency stop button	**11.** Drive/steer function button
4. Rocker switch for turntable rotate right/wheel steer right functions	**8.** Drive forward/lift direction arrow	**12.** Horn button

⚠ WARNING

UNSAFE OPERATION HAZARD

- **Unless in emergency situations, never operate the machine with the ground controller if there are still persons on the platform.**
- **Never operate the machine if any control handle or switch that controls the platform movement is not returned to the OFF position after being released.**

⚠ WARNING

COLLISION HAZARD

Before operating the boom, ensure the area near or under the platform is clear of persons or obstructions.

Preparation

1. Turn the key switch on the ground controller to the platform control position.
2. Pull out the emergency stop buttons on the ground and platform controllers to ON position.
3. Make sure that the associated indicator lights are on and no alarm messages are shown on the display.

Emergency stop button

1. Push in the emergency stop button on the platform controller to OFF position, and then all functions should not work.
2. Pull out the emergency stop button on the platform controller to ON position.

Horn button

Push the horn button, the horn should sound to alert personnel around.

Function button

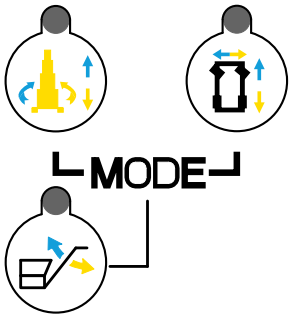

Push the function button before activating the associated function, otherwise the function will not work.

Enable button

1. Directly push the joystick without pressing and holding the enable button on the joystick, the associated function will not work.
2. Press and hold the enable button while pushing the joystick, the associated function will work.

Main boom up/down

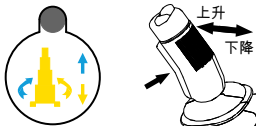

1. Push the main boom lift/turntable rotate function button, and then the indicator light will turn green.
2. Press and hold the enable button on the joystick, slowly push forward the joystick, the main boom should rise smoothly without abnormal noises.
3. Press and hold the enable button on the joystick, slowly pull backward the joystick, the main boom should descend smoothly without abnormal noises, and the buzzer should sound.

Note: The main boom lifting/lowering speed is in direct proportion to the joystick stroke.

NOTICE

This machine uses spiral coils for ground and platform communication cable, which, after stretched for a long time, will become less flexible. To facilitate the spiral coils returning to its specified position normally during platform lowering, if the machine has been in the operating position for more than 3h, the platform shall be lowered in stages, that is, wait 5 - 10 s for every lowering height of 1 m (3.3 ft). Make sure the boom is in stowed position when the machine is not in use.

Turntable rotate

1. Push the main boom lift/turntable rotate function button, and then the indicator light will turn green.
2. Press and hold the enable button on the joystick, and press on the left side of the rocker switch on top of the joystick, the turntable should rotate to the left.
3. Press and hold the enable button on the joystick, and press on the right side of the rocker switch on top of the joystick, the turntable should rotate to the right.

Jib boom up/down

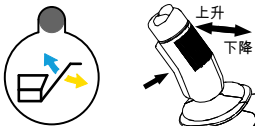

1. Push the jib boom lift function button, and then the indicator light will turn green.
2. Press and hold the enable button on the joystick, and slowly push forward the joystick, the jib boom should rise.
3. Press and hold the enable button on the joystick, slowly pull backward the joystick, the jib boom should descend.

Drive function

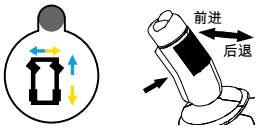

1. Push the drive function button, and then the indicator light will turn green.
2. Press and hold the enable button on the joystick, slowly push forward the joystick, the machine should drive forward.
3. Release the joystick, the machine should come to an immediate stop.
4. Press and hold the enable button on the joystick, slowly pull backward the joystick, the machine should drive reverse.
5. Release the joystick, the machine should come to an immediate stop.

Note: The drive speed is in direct proportion to the joystick stroke.

Steer function

1. Push the drive function button, and then the indicator light will turn green.
2. Press and hold the enable button on the joystick, and press on the left side of the rocker switch on top of the joystick, the machine should steer left.
3. Press and hold the enable button on the joystick, and press on the right side of the rocker switch on top of the joystick, the machine should steer right.

TESTING THE DRIVE SPEED

1. Draw two lines on the ground as reference, with the spacing of the two lines being 30m (98ft 5in)
2. Start the machine in stowed position.
3. Push the drive function button, then press and hold the enable button on the joystick and slowly deflect forward the joystick to the full stroke.
4. When the max drive speed is achieved and the front wheels reach the first line, start the time counting.
5. When the front wheels reach the second line, stop the time counting, and slowly bring the machine to a stop.
6. The time counted should be 27s.
7. If the time counted is less than 27s, immediately stop the testing and tag the machine, otherwise, go on to the next step.
8. Raise the mast approx. 1m (3ft 3in).
9. Push the drive function button, then press and hold the enable button on the joystick and slowly deflect forward the joystick to the full stroke.
10. When the max drive speed is achieved and the front wheels reach the first line, start the time counting.
11. When the front wheels reach the second line, stop the time counting, and slowly bring the machine to a stop.
12. The time counted should be 180s.
13. If the time counted is less than 180s, immediately stop the testing and tag the machine.

TESTING EMERGENCY LOWERING FUNCTION

⚠ WARNING

COLLISION HAZARD

Ensure that no person is under the jib boom before lowering the main boom and jib boom.

MAIN BOOM EMERGENCY LOWERING

1. Start the machine from the ground controls.
2. Push the main boom up/down function button.
3. Simultaneously press and hold the enable button and the up control button to raise the main boom to full height.
4. Pull out the handle of the main boom lift control valve.

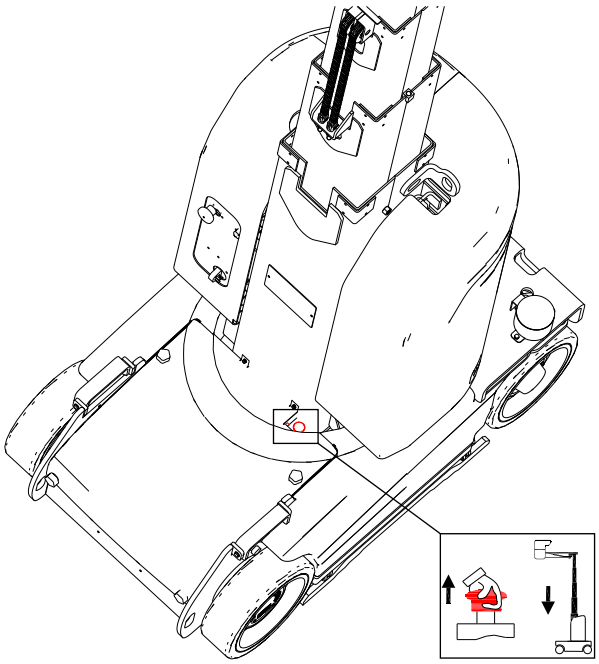

Figure 6-5

5. The main boom should descend in place.

JIB BOOM EMERGENCY LOWERING

1. Start the machine from the ground controls.
2. Push the jib boom up/down function button.
3. Simultaneously press and hold the enable button and the up control button to raise the jib boom to full height.
4. Lower the jib boom (please select one of the following methods based on the machine configuration):
   - Method 1: Select a suitable cross screwdriver and insert it into the jib boom lift control valve (see the figure below for the location), and the jib boom should descend fully.

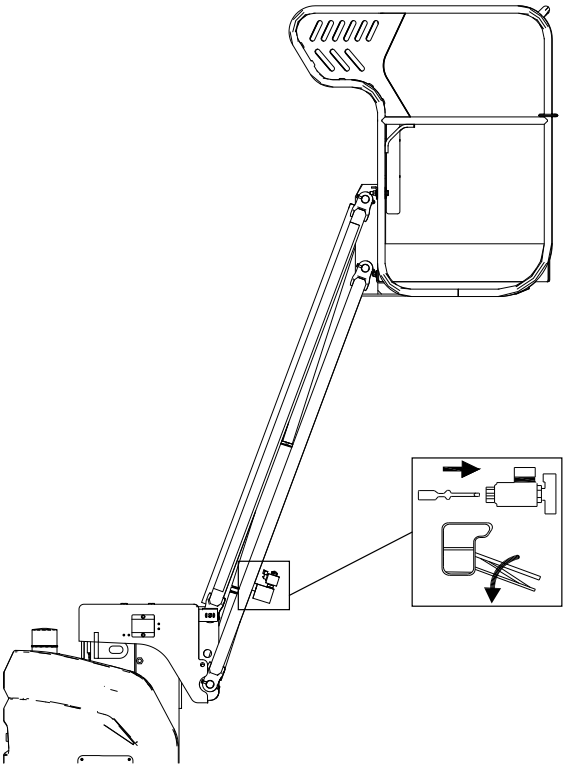

Figure 6-6

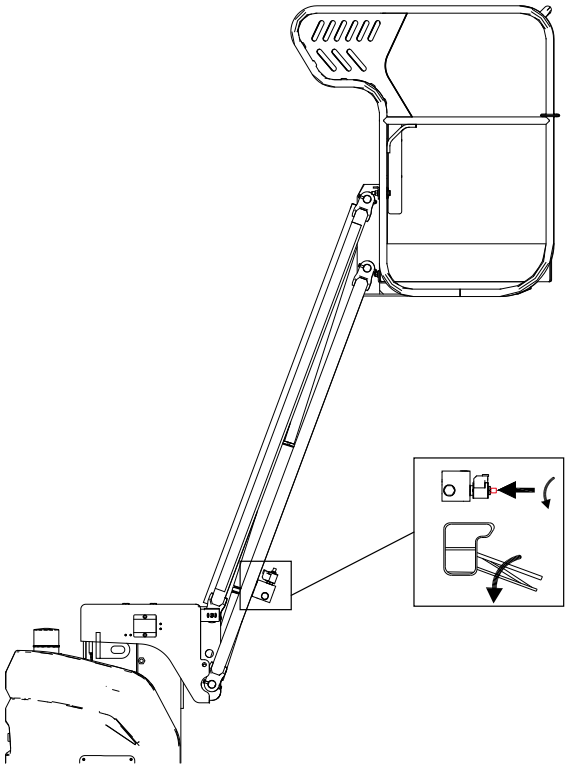

Figure 6-7

- Method 2: Press and hold the emergency lowering knob (see the figure below for the location), and turn it counterclockwise to pop it out, the jib boom should descend fully. To release the emergency lowering: press and hold the emergency lowering knob, and turn it clockwise to lock it.

TESTING THE POTHOLE PROTECTION

NOTICE

Perform the test on the ground using platform controls.

When the boom raises, the pothole guard cylinder pushes downward the protective plate to extend.

1. Start the machine.
2. Push the mast lift/turntable rotate function button.
3. Press and hold the enable button on the joystick, and slowly deflect forward the joystick to raise the mast approx. 0.5m (1ft 8in).
4. The pothole protective plates on both sides should fully extend.
5. Apply hand force to push the protective plate, the plate should not flip.
6. Press and hold the enable button on the joystick, and slowly deflect backward the joystick to lower the mast.
7. The pothole protective plates on both sides should retract.

8. Place a wooden block under the protive plate. The wooden block measures 50mm×100mm×50mm (2in×4in×2in).
9. Press and hold the enable button on the joystick, and slowly deflect forward the joystick to raise the mast approx.1m (3ft 3in).
10. The buzzer should sound continuously, the displays of platform and ground controls indicate “18”, and the mast is not prevented from raising.
11. Push the drive function button.
12. Press and hold the enable button on the joystick, and slowly deflect forward or backward the joystick.
13. The machine should not drive forward or reverse.
14. Press and hold the enable button on the joystick, and press on the left or right of the rocker switch on top of the joystick.
15. The machine should not steer left or right.
16. Push the mast lift/turntable rotate function button.
17. Press and hold the enable button on the joystick, and slowly deflect backward the joystick to lower the mast.

TESTING THE TILT PROTECTION

NOTICE

Perform the test on the ground using the platform controls. Do not stand on the platform.

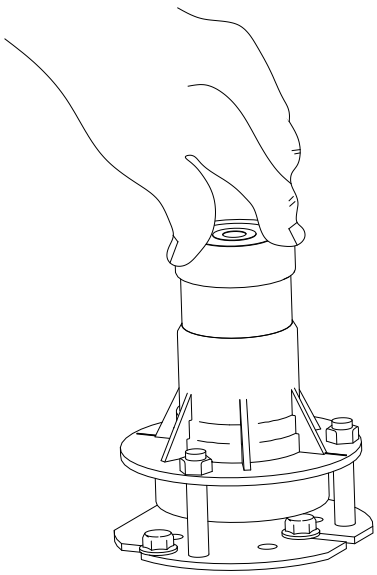

Figure 6-8

Testing the 3°level switch

1. Start the machine.
2. With the machine in stowed position, move the level switch in X (side-to-side) or Y (fornt-to-back) direction by 3°or more, the alarm should not sound.
3. Raise the mast until the lower limit switch disengages, the display will indicate “LL”(tilt alarm), and the mast lift and drive functions should be restricted.
4. Lower the platform to the stowed position, the tilt alarm should not sound, and the function restriction should be lifted.
5. Place two wooden blocks under the two wheels on the front or rear end of the machine. The wooden block dimension (L×W×H) is 150×100×63mm (5.9×3.9×2.5in). With the machine in stowed position, drive the machine on the blocks, the alarm should not sound.
6. Raise the mast until the lower limit switch disengages, the display will indicate “LL”(tilt alarm), and the mast lift and drive functions should be restricted.
7. Lower the platform to the stowed position, the tilt alarm should not sound, and the function restriction should be lifted.
8. Drive the machine off the blocks, and remove the blocks.
9. Place two wooden blocks under the two wheels on the left or right side of the machine. The wooden block dimension (L×W×H) is 150×100×43mm (5.9×3.9×1.7in). With the machine in stowed position, drive the machine on the blocks, the alarm should not sound.
10. Raise the mast until the lower limit switch disengages, the display will indicate “LL”(tilt alarm), and the mast lift and drive functions should be restricted.
11. Lower the platform to the stowed position, the tilt alarm should not sound, and the function restriction should be lifted.
12. Drive the machine off the blocks, and remove the blocks.

Testing the 7°level switch

1. Start the machine.
2. With the machine in stowed position, drive the machine on a slope exceeding 7°, the red indicator light of the level sensor should come on, and the drive speed should be reduced to the low speed mode (0.6km/h[0.37mph]).

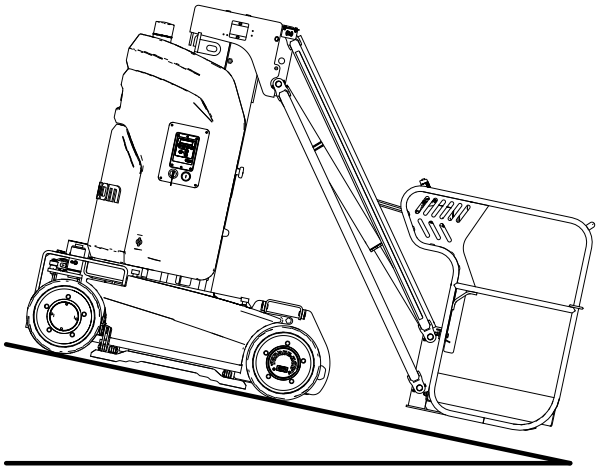

Figure 6-9

3. Drive the machine off the slope.

TESTING THE WEIGHING SYSTEM

NOTICE
Perform the test on the ground using platform controls. Do not stand on the platform.

Before the testing, fully raise and lower the mast and jib boom for twice to ensure the wear pads and tracks are properly lubricated.

1. Fully lower the mast, and gradually apply loads to the platform.
2. When the loads on the platform do not exceed 200kg (440 lb), the mast can be raised to the full height.
3. When the loads on the platform exceed 240kg (529 lb), the overload alarm should sound, the display should indicate“OL”, and the mast and jib boom lift functions should be restricted.
4. Remove the excessive loads from the platform, the machine functions should be resumed.

7 OPERATING THE MACHINE

⚠ WARNING

UNSAFE OPERATION HAZARD

Be sure to follow the instructions and safety rules in this manual. Failure to follow the instructions and safety rules in this manual may result in death or serious injury.

Do not operate this machine unless you have learned and practiced the rules for safely operating the machine as stated in this manual.

- **Know and understand the safety rules before continuing the next step.**
- **Avoid dangerous situations.**
- **Always check the machine before operating.**
- **Select appropriate machinery and personal protective equipment (hard hats, safety belt and gloves, etc.) for the task.**
- **Always perform a pre-operation function test before using the machine.**
- **Check the work site.**
- **Check the safety decals/ nameplate on the machine.**
- **Only use the machine according to the instructions in this manual and for its intended purpose.**

This section provides specific instructions for all the aspects of machine operation. The operator is responsible for following all the safety rules and instructions in this manual.

Use this machine to transport people and tools to the workplace. It is unsafe and dangerous to use this machine for purposes other than what is stated in this manual.

Only trained and authorized personnel may operate the machine. If more than one operator uses the same machine at different times of the same work shift, they must all be qualified operators and follow all the safety rules and instructions in this ***Operation Manual***.

Each new operator must perform the pre-operation inspection, pre-operation function test, and workplace checks before using the machine.

SPECIAL STATUS CODES

The ground controller and the platform controller display screens are used to display machine parameter information and codes. Users can check the current status of the machine from the information on the display screen. Below is a brief introduction to some special status codes of the machine. For more detailed information, please refer to the ***Maintenance Manual***.

Code	Description
OL	Platform overload indication: the current platform load exceeds 100% of the rated load.
LL	Machine tilt indication: the chassis inclination angle exceeds the set alarm range.
18	Pothole protection indication: after the platform is elevated, the pothole protection plate switch is not opened or this function is faulty.
7L	Operator protective function activation indication: the operator protective function has been activated.

STABILITY

The machine stability is based on two conditions which are called forward stability and backward stability.

⚠ WARNING

TIPPING HAZARD

Do not overload the platform or operate the machine on tilted surface to prevent forward or backward tipping.

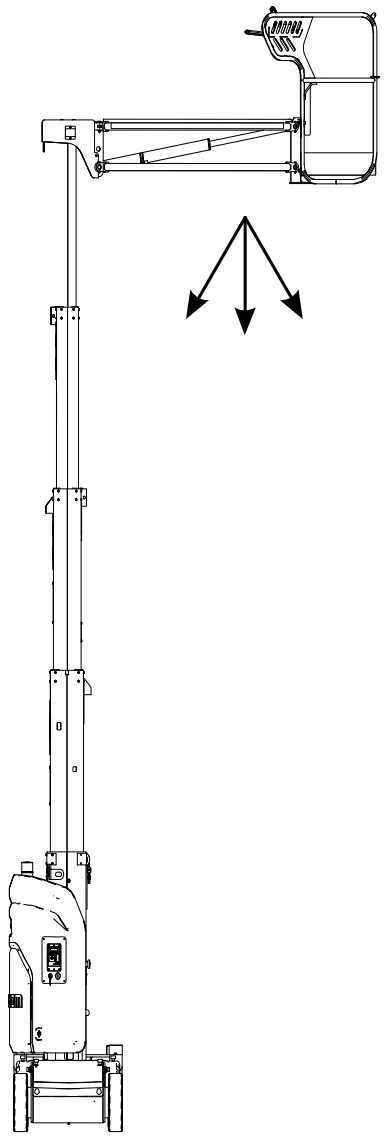

Figure 7-1 Position of least forward stability

1. Mast fully raised;
2. Jib boom horizontal;
3. Turntable rotated 90°;
4. The machine will tip over in the direction as indicated by the arrow if overloaded or operated beyond the limits of the maximum operating slope.

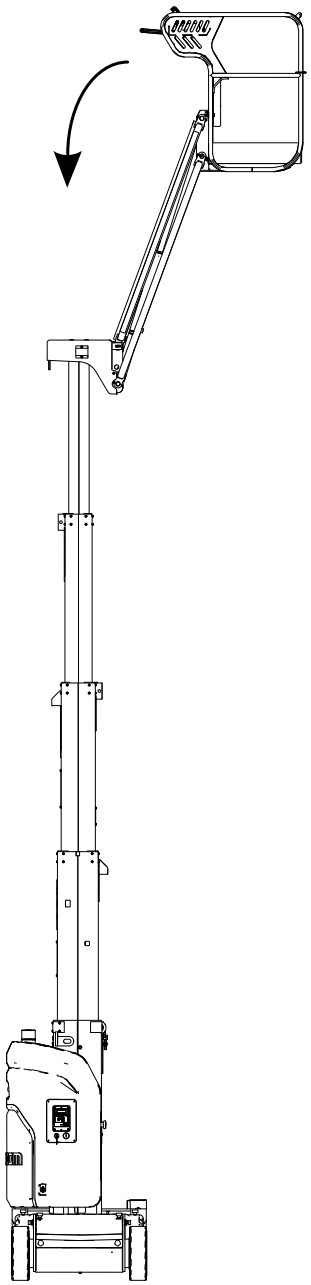

Figure 7-2 Position of least backward stability

1. Mast fully raised;
2. Jib boom fully raised ;
3. Turntable rotated 90°;
4. The machine will tip over in the direction as indicated by the arrow if overloaded or operated beyond the limits of the maximum operating slope.

EMERGENCY STOP

- Push in the emergency stop button at the platform or ground controls to OFF position, all machine functions will not operate.
- Push in the power disconnect switch at the left turntable cover to OFF position, the system will be disconnected from power supply and all machine function will not operate. The power disconnect switch is located as shown in the Figure below.

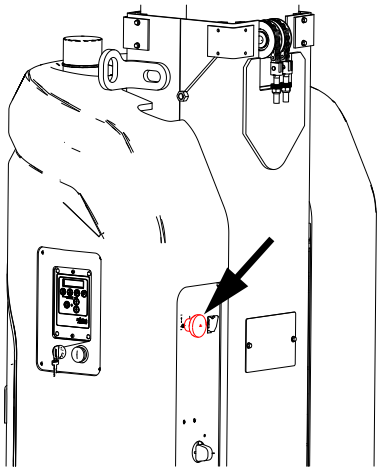

Figure 7-3

- To restore any machine function, pull out all emergency stop buttons and power disconnect switch to ON position.

EMERGENCY OPERATING

When the operator is unable to control the machine：

1. Other personnel shoud operate the machine from the ground controls only as required by the safety rules.
2. Other qualified personnel on the platform may use the platform controls. Do not continue operation if the controls do not function properly.
3. Use rescue equipmment to safely transfer the personnel in the platform. Cranes, forlifts or other devices of proper capacity may be used to stablize the machine from motion.

When the platform or jib boom is caught overhead：

If the platform or jib boom becomes jammed or snagged in overhead structures or equipment, rescue all people in the platform before freeing the machine.

EMERGENCY CONTROL

In case emergency situation, malfunction or power loss occurs, the emergency control procedures listed below may be applied as appropriate.

To lower the main boom

See ***Main boom emergency lowering , page 6-11***

To lower the jib boom

See ***Jib boom emergency lowering, page 6-11***

To raise the main boom

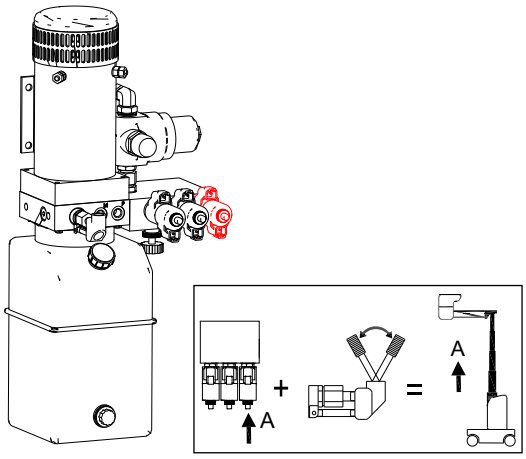

Figure 7-4

1. Open the right turntable cover, and locate the handle of hand pump.
2. Insert the handle into the hole of hand pump as indicated.
3. While pressing the button at the end of main boom lift valve, push and pull the handle up and down, the main boom should rise.

To rotate the turntable

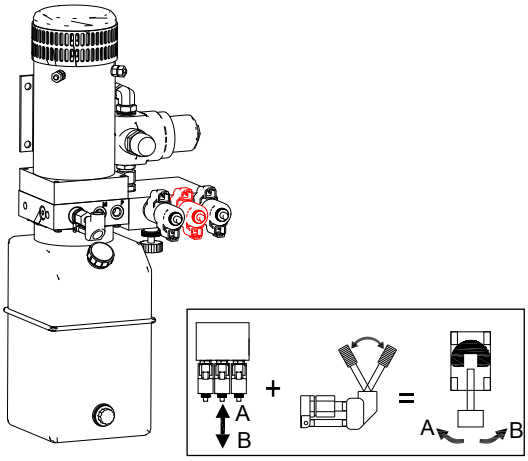

Figure 7-5

1. Open the right turntable cover, and locate the handle of hand pump.
2. Insert the handle into the hole of hand pump as indicated.
3. While pressing the button at the end of turntable rotate valve, push and pull the handle up and down, the turntable should rotate clockwise.
4. Pull out the ring at the end of the turntable rotate valve, and push and pull the handle up and down, the turntable should rotate counterclockwise.

To steer

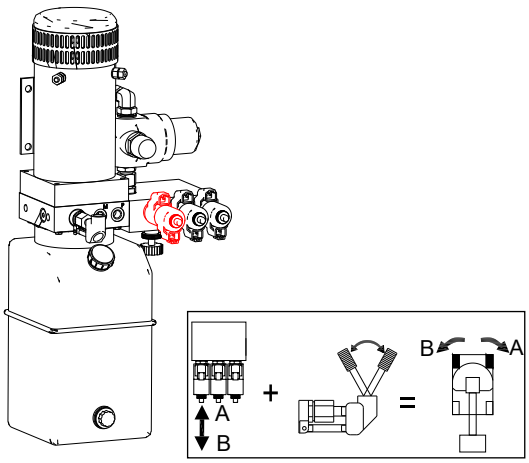

Figure 7-6

1. Open the right turntable cover, and locate the handle of hand pump.
2. Insert the handle into the hole of hand pump as indicated.
3. While pressing the ring of the button at the end of steer valve, push and pull the handle up and down, the machine should steer right.
4. Pull out the ring of steer valve, and push and pull the handle up and down, the machine should steer left.

EMERGENCY TOWING/ DRAGGING

⚠ WARNING

UNSAFE OPERATION HAZARD

- **Unless in case of emergency situations, machine malfunction, power loss or loading/unloading, it is strictly prohibited to tow or drag the machine.**
- **When towing/dragging the machine, there should be no person in the platform.**
- **Before towing/dragging the machine, ensure that the machine is in stowed position with the turntable securely locked and platform free of any tools or objects.**
- **Do not tow/drag the machine with the engine started or the drive hub engaged.**
- **The machine must on a level surface or secured before releasing the brake.**
- **The towing/dragging of the machine must follow the local laws and traffic rules.**

NOTICE

The allowable towing speed is 3km/h (1.9mph), the maximum towing distance is 500m (0.3mile).

Method 1 :

1. Choke wheels securely to prevent motion of the machine.
2. Be sure the path is clear of obstructions, and the power disconnect switch in off position.
3. Move upward the the brake release switch.

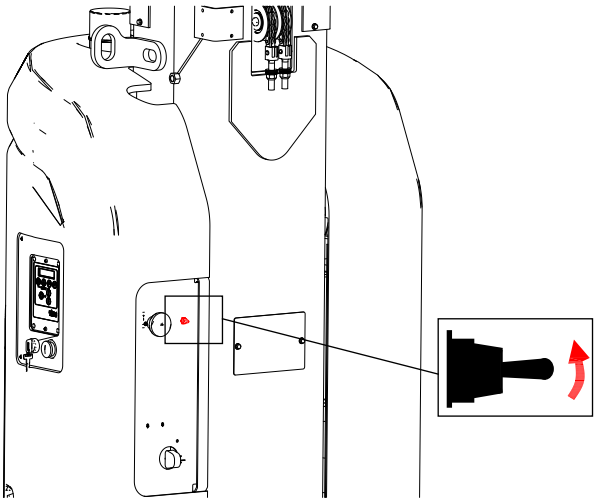

Figure 7-7

4. When a beef sounds, it indicates the brake is released and the machine is all set for the towing/dragging.
5. After the towing/dragging is complete, position the machine on a firm level surface.
6. Choke wheels securely to prevent motion of the machine.
7. Move again the brake release switch, or push in the emergency stop button, or turn the key switch to off position, to engage the brake.
8. Remove the chokes as desired.

Method 2 :

1. Choke wheels securely to prevent motion of the machine.
2. Be sure the path is clear of obstructions, and the power disconnect switch in off position.
3. Remove the both end cap bolts and brake cover from the wheel reducer.

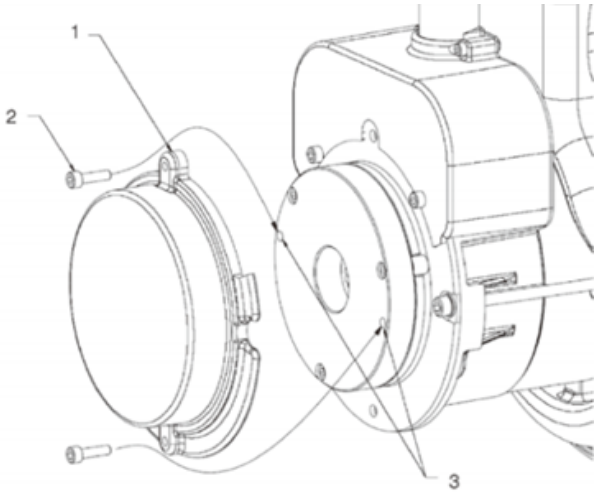

Figure 7-8

Table 7-1

No.	Description
1	Brake cover
2	End cap bolt
3	Disengage hole

4. Insert the end cap bolts into the both disengage holes on the brake housing.
5. Tighten the bolts to disengage the brake from the drive motor.
6. Repeat the procedure above to the other wheel reducer. After the both brakes are disengaged from the drive motors, the machine is all set for the towing/dragging.
7. After the towing/dragging is complete, position the machine on a firm level surface.
8. Choke the wheels to prevent the machine from rolling.
9. Remove the end cap bolts from the disengage holes, and install the brake cover and end cap bolts.
10. Remove the chokes as desired.

CHARGING THE BATTERY

The batteries used include 3 types: lead acid, lead acid maintenance-free and lithium batteries, and the latter two batteries do not need maintenance.

⚠ WARNING

UNSAFE OPERATION HAZARD

- **Make sure to read and follow the manufacturer's recommendations on how to use and maintain the battery.**
- **The battery contains sulfuric acid and can generate explosive mixture of hydrogen and oxygen. Keep the battery far away from sparks and fire (including cigarette and smoke) to avoid explosion.**
- **Do not charge the battery under direct sunshine.**
- **Charge the battery on a well-ventilated site.**
- **Do not expose the battery on charging to water or rain.**
- **Charge the battery at the proper voltage as indicated on the decal.**
- **If the battery is topped by a cover or other objects, remove them before charging to ensure the flammable gas produced during charging can be fully dispersed. Do not close the cover until 30 minutes after the charging is completed. The charging site should be well-ventilated and if charging the battery indoor, a fan can be used for better ventilation.**

⚠ WARNING

DAMAGED BATTERY HAZARD

- **Only use the charger provided by the manufacturer, and only connect the charger to a grounded 3-phase power outlet.**
- **Do not reverse the positive and negative of the battery for charging.**
- **Charge the battery as soon as possible once the battery is depleted.**
- **Do not deplete the battery more than 80% of the standard capacity, as frequent over-depletion of the battery will shorten the battery life.**
- **The battery must be charged fully, as intermittent charging will bring damage to the battery.**

⚠ WARNING

ELECTROCUTION HAZARD

- **Contact with live circuit may cause serious injury or death. Make sure to wear goggles, gloves and protective clothing.**
- **Remove all rings, watches and other jewelry.**

NOTICE

- *The machine is delivered with a battery level less than 80%, therefore it is recommended that the battery be fully charged after receiving the shipment.*
- *The charging current should not exceed the max allowable charging current as specified on the battery.*
- *The charging voltage should not exceed the max allowable voltage as specified on the battery.*
- *The charging temperature range is -10℃~45℃. If a charge heating system is available, the temperature range is -20℃~45℃.*

Charging the lead acid battery (requiring maintenance)

Charging

1. Check the battery level on the display of ground control box. When the battery level is less than or equal to 20%, an alarm will be triggered and the battery needs to be charged immediately. For the purpose of not affecting the normal operation of the machine, it is recommended to charge the battery when the battery level is lower than 30%.

   Alternatively, open the cover on the battery and measure the density of the electrolyte. If the density of the electrolyte is less than 1.13kg/l, it means that the battery has been over-discharged (the depth of discharge exceeds 80%) and must be charged immediately. This should be avoided, as frequent over-discharge will reduce the service life of the battery.

   Note: Measure the temperature of the electrolyte, if it is higher than 45°C, wait for the battery to cool before continuing the following steps.

2. Completely power off the machine.
3. Connect the plug between the battery and the charger cable. If the machine is equipped with an automatic water refilling system, ensure that the refilling pipe is connected.
4. Connect the battery charger to a grounded AC circuit. When the battery is fully charged, the corresponding indicator light will be on.
5. After charging is complete, disconnect the cable plug from the battery to the charger.

Adding water

NOTICE

- *The electrolyte level should be checked after each charging, and if the level is found to be low, add water in time.*
- *The water shall be added after charging. Adding water before charging may cause acid overflow during charging.*

1. For batteries equipped with an automatic water refilling system, when the electrolyte is at the lowest level with the battery fully charged (the white dot of the battery observation hole is not at the top), add water immediately. It is recommended to use an automatic water refilling machine for refilling, with the operation steps as follows:
   1) Open the bucket cover of the water refilling machine.
   2) Add deionized water.
   3) Put back the bucket cover and connect the water refilling plug.
   4) Connect the quick connector between the water refilling machine and the battery and turn on the power switch to start automatic water refilling.
   5) After water refilling is completed, the automatic water refilling system will automatically stop.
   6) Turn off the power switch and disconnect the water refilling plug to complete water refilling.
2. If the battery is not equipped with an automatic water refilling system, check the electrolyte level after charging. If the level is lower than the allowable height (the white dot of the battery observation hole is not at the top), wear gloves to add conforming distilled water or deionized water to the standard level (1-2cm above the minimal level of the water filler plug). Never add any acid solution.

⚠ WARNING

CHEMICAL BURN HAZARD

- Avoid battery acid escaping out or contact with unprotected skin, and if does, wash the skin with a large amount of clear water and seek medical assistance immediately.
- If excessive distilled water is added, suck out the excessive distilled water until normal level is reached. If excessive distilled water is added and the electrolyte overflows, use water mixed with bicarbonate (baking soda) to neutralize the acid, and blot up the liquid with a suction pipe.

Charging the maintenance-free battery

1. Check the battery level on the display of ground control box. When the battery level is less than or equal to 20%, an alarm will be triggered and the battery needs to be charged immediately. For the purpose of not affecting the normal operation of the machine, it is recommended to charge the battery when the battery level is lower than 30%.
2. Completely power off the machine.
3. Connect the charger to a grounded AC circuit. The indicator light will be on after the battery is fully charged.
4. After charging, disconnect the cable plug from the battery to the charger.

CHARGER LED AND DIGITAL DISPLAY

LED indicator light and digital display:

Connect the charger to the battery, and plug the charger to a civil power outlet, the charger will get into the charging mode. The digital display will show the following in turn: AC XXX(current AC input voltage), CPU X.XX(software version of the charger)；b**(shows the current charging curve code)

Charging state indicator lights and digital display:

- % capacity percentage indicator light：digitally show the current percent，for example：10 20 30… 100 (%).
- V charge voltage indicator light：show the current charge voltage, digitally show the specific voltage value, for example：24.0 (V).
- A charge current indicator light：show the current charge current, digitally show the specific charge current value, for example：36.0 (A).

CHANGING CHARGER BATTERY CURVE

Note：The battery curve of the charger for the lithium battery needs no setting, the following instructions are only for the lead acid battery charger only.

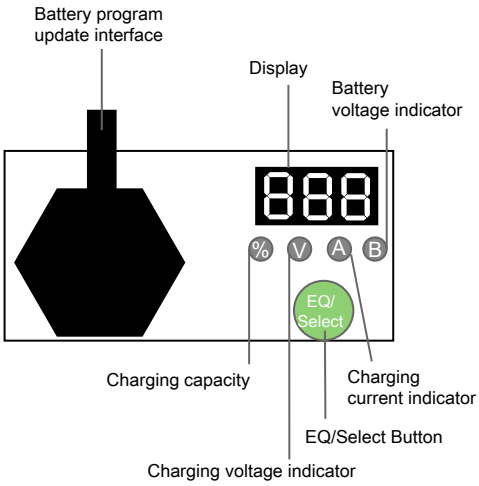

Figure 7-9

To switch the curve:

1. Press and hold the Select key for 5s and release, the display will indicate the current curve code.
2. Press gently for 1s and release to switch the charging curve codes.
3. After selection of charging curve code, press and hold Select key for 5s, the charging curve code will flash quickly, release the key, and the battery curve has been configured.
4. Repeat the steps above if re-change is needed.

To enter EQ mode manually:

1. Press and hold Select key for 10s, when the display shows EQ in quick flashing, release the key and the charger has been set in EQ mode.
2. To exit the EQ mode, likewise, press and hold the Select key for 10s, when the display shows OFF in quick flashing, release the key and the charger will exit the EQ mode.

Charger in-built curve codes and respective battery models

Table 7-2

Curve codes	Battery models
B02	Trojan T105
B04	Discover AGM
B05	US Battery Flooded
B07	Trojan T125
B11	Trojan T1275 (two in series and two in tandem)

Note: the default curve code is B04.

DRIVING ON A SLOPE

⚠ WARNING

TIPPING HAZARD

- **Do not operate the machine on the slope exceeding the maximum slope rating (3°).**
- **Do not drive the machine on the slope exceeding the machine gradeability (14°).**

Before driving on a slope：

1. Determine the gradeability of the machine.

Maximum gradeability:

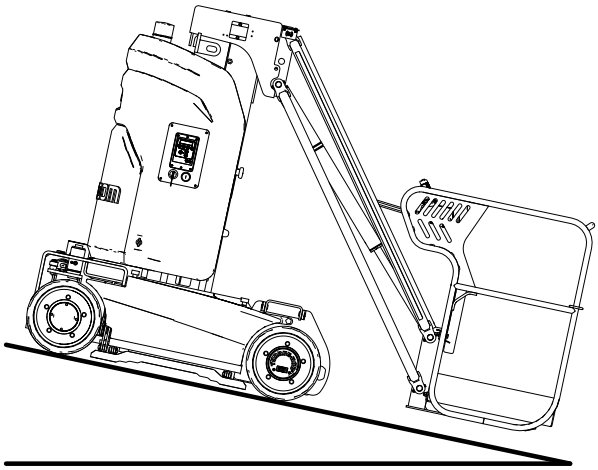

Slope rating: 25%/14°

2. Ensure the machine is in stowed position.
3. Ensure the slope grade is within the limits of the machine gradeability.

NOTICE

Gradeability refers to the maximum permissible percentage of the slope (or called slope grade as below) when the machine is on solid ground with sufficient traction and the platform is carrying only one person. As the weight of the machine's platform increases, the machine's gradeability reduces.

To determine the slope grade :

1. Use a carpenter's level, a straight piece of wood (at least 1 m [3.3 ft] long) and a tape measure.
2. Measure the height H and length/distance L of the slope.

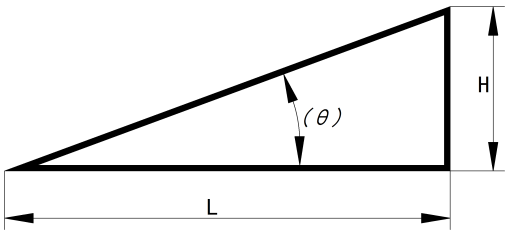

Figure 7-10

3. Slope grade= H/L x 100%.

NOTICE

The machine must not drive for over 2min on the maximum permissible slope grade to prevent the tires running suspended.

OPERATOR PROTECTIVE OPERATION (IF EQUIPPED)

While the operator operates the machine from the platform, accidents caused by involuntary operation of the platform controller may occur. The operator protective device can disable all functions of the platform control panel and activate the strobe light to warm the operator in case of inadvertent operation.

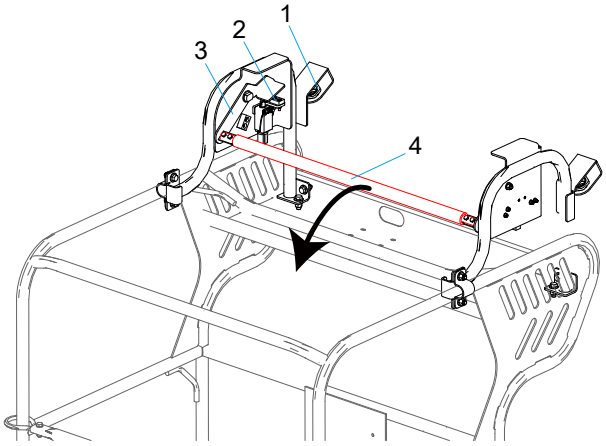

Figure 7-11

No.	Description
1	Strobe light
2	Magnet
3	Angle bracket
4	Round bar

1. When the operator protective device is not triggered, the position of the round rod is as shown in the diagram above, with the angle brackets on the left and right sides being attracted by the magnet below.
2. If the round bar is pressed down, the angle brackets on both sides detach from the magnets and flip up, the travel switch will disconnect, the left and right strobe lights will flash, and such functions will be disabled: traveling, steering, main boom elevating, jib lifting up and turntable slewing (except main boom lowering and jib lifting down).
   - Lift the round bar up until the angle brackets on both sides are attracted by the magnet again. Then, the strobe light will turn off, and the machine will resume all operations (ensure the machine is in a safe position before performing this operation).

WARNING

The operator protective device (11kg [24lb]) installed on the platform will affect the load capacity of the platform; this must be factored into the total platform capacity.

This Page Intentionally Left Blank

8 TRANSPORTING AND LIFTING THE MACHINE

⚠ WARNING

TRANSPORT AND LIFTING HAZARD

- **Use a forklift or crane with the proper lifting capacity to lift the machine. Use good judgment and planned movement to control the machine.**
- **The transport vehicle must be parked on level ground.**
- **The transport vehicle must be secured from rolling when loading the machine.**
- **Ensure that the vehicle capacity, loading surface, belts or ropes are sufficient to support the weight of the machine, refer to *1 Machine Specifications, page 1-1*.**
- **Before driving the machine onto the transport vehicle, ensure that the slope is within the limit of the machine gradeability, refer to *1 Machine Specifications, page 1-1*.**
- **Before transportation and lifting, check if the rigging anchor point and its attached structure are in good condition.**
- **Be sure the machine is on a level surface or secured before releasing the brake.**
- **Never transport people on the machine while the machine is being towed or while the machine is engaged in towing or lifting operations.**
- **The machine should be transported following the local laws and traffic rules.**
- **When using a forklift or crane to lift the machine, try to prevent the machine from colliding with nearby objects.**
- **Lock the wheels of the machine after it has been loaded to prevent the machine from rolling.**

NOTICE

*Do not tow/drag the machine unless an emergency, failure or loss of power occurs. Refer to **Emergency Towing/Dragging, page 7-5**.*

LIFTING THE MACHINE WITH A FORKLIFT

Follow these requirements when lifting the machine by forklift:

1. Make sure the extending platform, controller and chassis components are stable. Remove all loose parts from the machine.
2. Fully lower the platform. Keep the platform down during transportation.
3. Locate the forklift slots on the side of the chassis, and align the forklift fork with the forklift slots.

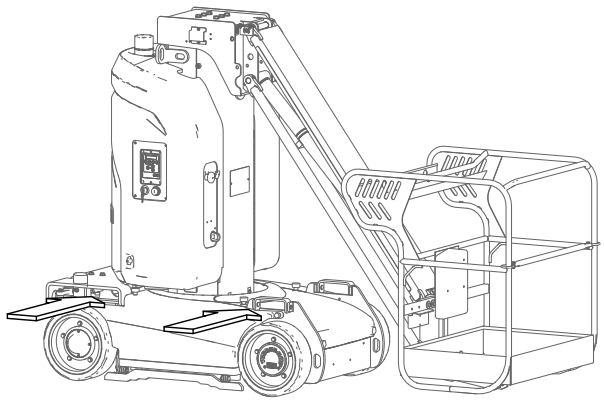

Figure 8-1

4. Drive forward to fully insert the fork frame.
5. Lift the machine by 16 in. (0.4 m) and then tilt the fork frame backward slightly to keep the machine stable.
6. Keep the machine horizontal when lowering the fork frame.

NOTICE
Failure to use the forklift slot while lifting machine may result in component damage.

LIFTING THE MACHINE WITH A CRANE

Follow these requirements when lifting the machine by crane:

1. The machine must be in stowed position while lifting the machine with a crane.
2. Ensure the boom is positioned in the same direction as the chassis travels.
3. Remove all loose parts of the machine.
4. Determine the center of gravity of the machine (X: 513mm/1ft 8.2in; Y: 510mm/1ft 8.1in).

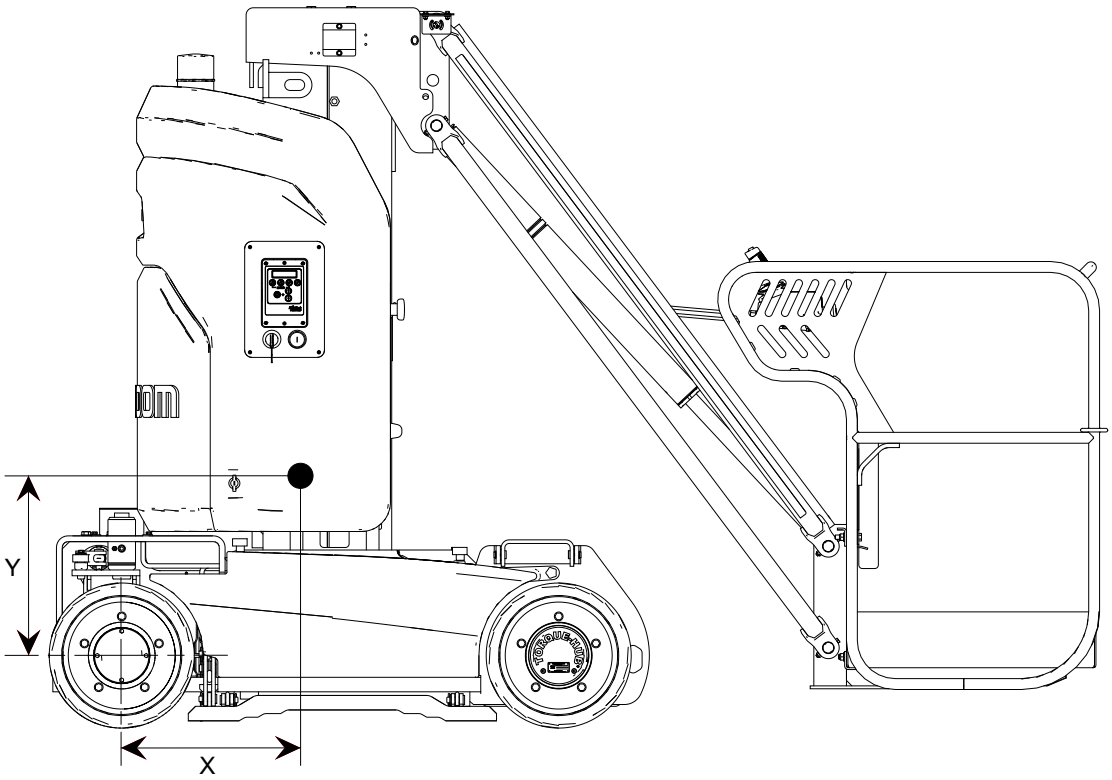

Figure 8-2

5. Attach the rigging to the both lifting eyes.

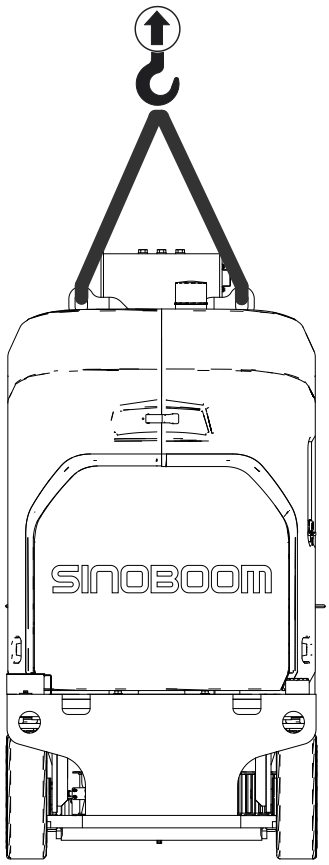

Figure 8-3

6. Only connect the rigging to the designated lifting points on the machine. Adjust the rigging to avoid damaging the machine and to keep the machine horizontal.

NOTICE
To protect the machine, choose the appropriate length of rigging.

TRANSPORTING THE MACHINE

Follow these requirements when transporting the machine by truck or trailer:

1. Keep the machine in stowed position.
2. Turn the key switch at the ground controls to OFF position, and remove the key.
3. Remove all loose or insecure parts.
4. Ensure the rope or belt is of sufficient capacity.
5. Use at least 4 ropes/belts to fasten the chassis and one rope/belt for the platform.
6. Adjust the rigging to prevent damage to the rope/belt.
7. To protect the boom components and platform load sensors, do not apply too large a downward force to the rope/belt fastened near the platform. It is recommended to add a foam layer beneath the platform and ensure the platform is suspended in the air.

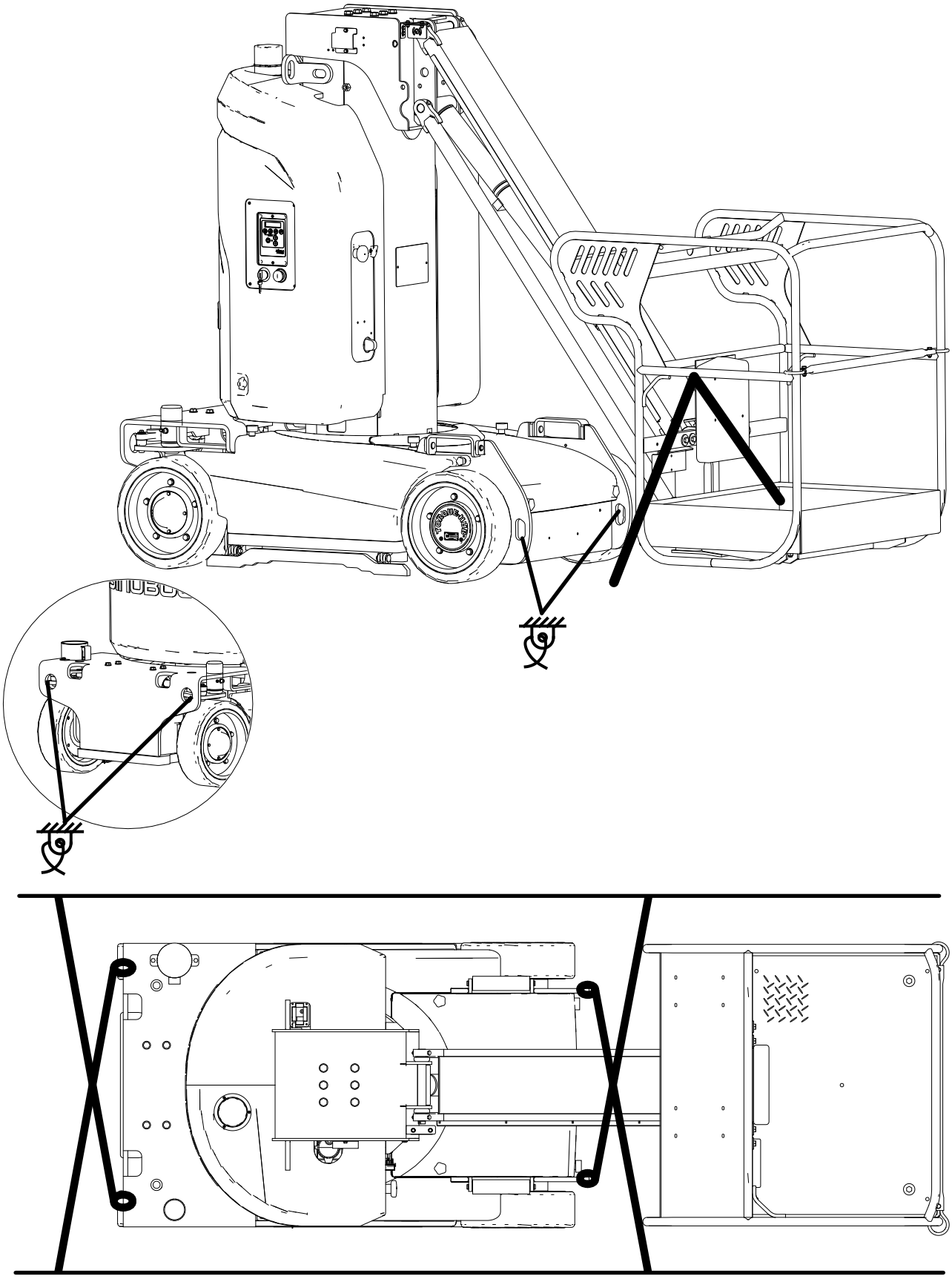

Figure 8-4

9 MAINTENANCE

This section provides detailed procedures for regular maintenance inspections. For further information about maintenance, please see ***Maintenance Manual***.

⚠ WARNING

UNSAFE OPERATION HAZARD

Failure to follow the proper maintenance may result in death, serious injury or damage to the machine.

Follow these general rules:

- Preventive maintenance procedure should be established by the user according to the manufacturer's recommendations, machine operational environment and intensity of use, which should include both the regular inspection and the annual inspection.
- Professionally trained, qualified personnel must conduct routine maintenance inspections on this machine.
- The maintenance personnel must know various potential hazards that may arise during the inspection and maintenance work, and select appropriate safety protective equipment according to the maintenance work and work place conditions, such as safety helmets, protective masks, protective gloves, goggles, protective clothing, safety belts and safety shoes.
- Before conducting any inspection and maintenance work, the maintenance personnel shall prepare appropriate maintenance tools as required by the work, such as wrench, screwdriver, pliers, multimeter, pressure gauge, lubrication device, jack and lifting equipment.
- Daily routine maintenance inspections must occur during normal operation of the machine. Maintenance inspectors must carry out inspection and maintenance according to the repair & inspection report and must complete the repair & inspection report.
- Regular maintenance inspections must occur by operators and at quarterly, biannual and annual intervals by qualified, trained personnel. Qualified, trained personnel must check and maintain the machine according to the repair & inspection report and must complete the repair & inspection report.
- Immediately remove a damaged or malfunctioning machine, mark it and stop using it.
- Repair any damaged or malfunctioning machine before operating it.
- Keep all machine inspection records for at least 10 years or until the machine is no longer in use or as required by machine owner/company/custodian.
- The inspection and maintenance intervals depend on the manufacturer's recommendations, and should also be appropriate to the operational conditions and environment.
- Conduct a quarterly inspection on machines that have been out of service for a period lasting longer than three months.
- Without the manufacturer's approval, do not change any parts, especially those load-bearing and safety-relevant parts. While maintaining the machine, replace any parts on the machine using the same parts or the same parts of the original machine.
- Any change that may affect the stability, strength or performance of the machine, must obtain the manufacturer's prior approval.
- After any major change or maintenance that may affect the stability, strength or performance of the entire machine or its parts, the machine must be inspected and verified.
- Unless otherwise specified, perform all maintenance procedures according to the following terms and conditions:
  - Park the machine on flat, level, firm ground.
  - Keep the machine in the stowed position.
  - Ensure the key switch of the ground controller is in the OFF position and remove the key to prevent unauthorized use of the machine.
  - Place the red emergency stop button on the platform control box and ground controller in the OFF position to avoid accidental start-up of the operating system.
  - Disconnect main power switch.
  - Disconnect all DC power from the machine.
  - Lock all wheels to prevent movement of the machine.
  - Before releasing or removing the hydraulic components, release the hydraulic oil pressure in the hydraulic pipeline.

MAINTENANCE SCHEDULE

There are a number of factors which can affect the design life including but not limited to, severity of operating conditions/routine maintenance. Dependent on the frequency of use and severity of the operating environment, planned inspections shall be carried out by the personnel qualified in the maintenance and service of the machine models involved to ensure the aerial work platform can work safely and effectively for a long time. Maintenance operations must be carried out by a SINOBOOM-approved qualified technician, and recorded in the maintenance inspection report.

The table below is the Maintenance Schedule recommended by SINOBOOM. The harsher the operating environment, the more frequent the inspection will be.

Table 9-1

MAINTENANCE SCHEDULE						
Components	**Intervals**					
	Daily	**Every 500h or 6 months**	**Every 1000h or annually**	**Every 2000h or bi-annually**	**Every 5000h or 5 years**	**Every 10000h or 10 years**
Chassis and turntable components						
Tires and rims	1, 2	9				8
Travel reducer	1, 2	9				
Wheel carrier	1, 2	6				
Steer cylinder	1, 2, 3					
Slewing bearing	1, 2	6, 9				
Slewing motor	1, 2, 3	6				
Boom components						
Wire rope	1, 2, 13				8	
Chain	1, 2	6	11, 13			8
Telescopic boom	1, 2		9, 11			
Wear pads			1, 2, 11			
Platform components						
Platform	1, 2					
Guardrail	1, 2					
Lanyard anchorage points	2					
Functions and controls						
Platform controls	1, 2, 10					
Ground controls	1, 2, 10					
Emergency stop buttons	2, 10					
Power-off switch	2, 10					
Horn	10					
Brake	10					

MAINTENANCE SCHEDULE

Components	Intervals					
	Daily	Every 500h or 6 months	Every 1000h or annually	Every 2000h or bi-annually	Every 5000h or 5 years	Every 10000h or 10 years
Brake release		10				
Drive speed		10				
Emergency lowering		10				
Pothole guard limit switch	10					
Boom upper limit switch	10					
Boom lower limit switch	10					
Level sensor	10					
Angle sensors (-wheel carrier and jib boom)		10				
Load sensing system		10				
Hydraulic and electrical components						
Hydraulic oil	4			8		
Hydraulic tank	1, 2, 3, 4			7		
Lift cylinder	1, 2, 3	10				14
Steering cylinder and jib cylinder	1, 2, 3	6 (per month), 10				
Hand pump	1, 2, 3		10			14
Hydraulic filters	1, 2, 3	8				
Hydraulic hoses & fittings	1, 2, 3					
Power unit	1, 2, 3					
Electrical wiring	1, 2					
Battery	1, 2, 5					
Overall machine components						
Structural parts	1, 2					14
Welds	2					14
Pins and retaining pins	1, 2					8
Wear pads and shims		2, 6				8
Bearings		2, 6				8

MAINTENANCE SCHEDULE						
Components	Intervals					
	Daily	Every 500h or 6 months	Every 1000h or annually	Every 2000h or bi-annually	Every 5000h or 5 years	Every 10000h or 10 years
Housing and covers	1, 2					
Operation/ maintenance/parts manuals	12					
Decals and nameplate	12					
Safety belt & helmet	12					

1–Check for proper installation
2–Check for damage, cracks, deformation or wear, etc.
3–Check for leaks
4–Check oil level
5–Check battery level
6–Lubricate
7–Drain, clean and refill
8–Replace
9–Tighten
10–Check by testing
11–Check by measuring
12–Verify
13–Check tensioning
14–Overall check (disassembly may be required)

CONDUCTING A PRE-DELIVERY INSPECTION

When the machine owner/company changes, in addition to conducting a pre-delivery inspection, the corresponding inspection shall be carried out according to the maintenance schedule requirement and repair & inspection report. When conducting a pre-delivery inspection, comply with the following requirements:

1. It is the responsibility of the machine owner/company to perform a pre-delivery inspection.
2. Follow this procedure each time before delivery. Performing a pre-delivery inspection could reveal potential problems with the machine before you begin putting the machine into service.
3. Never use a damaged or malfunctioning machine. Tag the machine and do not use it.
4. Only professionally trained, qualified personnel may repair the machine and must follow the procedures as stated in *operation manual* and *maintenance manual*.
5. A competent operator must conduct daily maintenance on this machine as stated in *operation manual* and *maintenance manual*.

Before delivering the machine, complete the following record using these instructions:

1. Prepare the machine before delivery, which includes performing a pre-delivery inspection, following maintenance procedures and performing functional inspections.
2. Use the following table to note the results. After each section is complete, mark the appropriate box.
3. Record the inspection results. If any inspection results are "NO", the machine must be stopped and re-inspected after repair is completed and marked in the box marked "inspection".

Table 9-2

PREPARE THE WORK RECORD BEFORE DELIVERY			
Model			
Serial No.			
Inspection Item	**YES/Machine is in Good Condition**	**NO/Machine Has Damage or Malfunction**	**REPAIRED/Machine Has Been Repaired**
Pre-operational Inspection			
Maintenance Procedure			
Functional Inspection			
Machine Buyer/ Renter			
Inspector Signature			
Inspector Title			
Inspector Company			

MAINTENANCE INSPECTION REPORT

1. The maintenance Inspection Report includes check items for each type of inspection.
2. Duplicate the Maintenance Inspection Report for each inspection. Store the completed tables for 10 years or until the machine is no longer in use or as required by machine owner/company/custodian.
3. Use the following table to note the results. After each item is complete, mark the appropriate box.
4. If any inspection results are "NO", the machine must be stopped and re-inspected after repair is completed and the box marked “REPAIRED” shall be checked. Select the appropriate inspection procedure based on the inspection type.

Table 9-3

MAINTENANCE INSPECTION REPORT				
Model				
Serial No.				
Daily/pre-operation	**YES/Machine is in Good Condition**	**NO/Machine Has Damage or Malfunction**	**REPAIRED/ Machine Has Been Repaired**	**Problem Description**
Boom components				
Inspect retracting wire rope				
Electrical and hydraulic systems				
Inspect hydraulic oil level				
Inspect battery level				
Functions and controls				
Inspect ground controls				

MAINTENANCE INSPECTION REPORT				
Inspect platform controls				
Inspect emergency lowering				
Inspect drive speed				
Inspect pothole protection				
Inspect tilt protection				
Inspect brake system				
Inspect load sensing system				
Overall machine components				
Inspect visually the overall machine components				
Inspect manuals and decals				
Inspect safety belt and helmet				
After 30 days or 50h of operation	**YES/Machine is in Good Condition**	**NO/Machine Has Damage or Malfunction**	**REPAIRED/ Machine Has Been Repaired**	**Problem Description**
Chassis and turntable components				
Inspect tires, rims and fasteners				
Electrical and hydraulic systems				
Inspect hydraulic filter elements				
Every 6 months or 500h of operation	**YES/Machine is in Good Condition**	**NO/Machine Has Damage or Malfunction**	**REPAIRED/ Machine Has Been Repaired**	**Problem Description**
Chassis and turntable components				
Lubricate steer system (-wheel carrier)				
Lubricate slewing bearing				
Inspect tires, rims and fasteners				
Inspect slewing bearing bolts				
Boom components				
Lubricate chains				

MAINTENANCE INSPECTION REPORT

Electrical and hydraulic systems				
Inspect hydraulic cylinder drift				
Inspect hydraulic hoses				
Inspect hand pump				
Functions and controls				
Inspect brake release				
Inspect emergency lowering				
Annually or every 1000h of operation	**YES/Machine is in Good Condition**	**NO/Machine Has Damage or Malfunction**	**REPAIRED/ Machine Has Been Repaired**	**Problem Description**
Chassis and turntable components				
Inspect tires, rims and fasteners				
Boom components				
Inspect boom wear pads				
Inspect chain tensioning				
Inspect 1 and 2 telescopic boom tightly secured to the brackets				
Electrical and hydraulic systems				
Inspect the battery				
Replace hydraulic filter elements				
Bi-annually or every 2000h of operation	**YES/Machine is in Good Condition**	**NO/Machine Has Damage or Malfunction**	**REPAIRED/ Machine Has Been Repaired**	**Problem Description**
Electrical and hydraulic systems				
Replace hydraulic oil				
Every 5 years or 5000h of operation	**YES/Machine is in Good Condition**	**NO/Machine Has Damage or Malfunction**	**REPAIRED/ Machine Has Been Repaired**	**Problem Description**
Boom components				
Replace retracting wire rope				

MAINTENANCE INSPECTION REPORT				
Every 10 years or 10000h of operation	**YES/Machine is in Good Condition**	**NO/Machine Has Damage or Malfunction**	**REPAIRED/ Machine Has Been Repaired**	**Problem Description**
Overall machine components				
Inspect the overall machine components				
User				
Inspector signature				
Inspection date				
Inspector title				
Inspector company				

MAJOR MODIFICATION AND REPAIR RECORD

1. A major modification/repair is a modification/repair made to all or part of a machine that affects the stability, strength or performance of the machine.
2. Each time the machine owner/company makes a major modification/repair to the machine, it should be documented using the form below. Keep the form properly until the machine is taken out of service, or as requested by the machine owner/ company.
3. Major modifications/repairs to the machine must be performed by a qualified service technician.
4. The machine must be inspected and verified after major modifications/repairs, with the inspection items including but not limited to all items in the maintenance and inspection report.
5. If the inspection result of each item in the Maintenance and Inspection Report is “YES”, the “Machine Status after Modification/Repair” in the form will be “Good” and the machine can be used. If either inspection result is “NO”, the machine must be re-inspected after the repair is completed until the machine is in “Good” condition before continuing to use the machine.

Table 9-4

Major Modification and Repair Record					
Model					
Serial No.					
Date	**Problem Description**	**Modification/Repair Item**	**Machine Status af- ter Change**	**Repairman’s Company and Position**	**Repair- man Signature**

This Page Intentionally Left Blank

10 DECALS/NAMEPLATE INSPECTION

Use appropriate inspection methods to check that all decals are legible and properly in place..

Replace any lost or damaged safety decals.

Clean safety decals with neutral soap and water. Do not use solvent-based cleaners, which can damage safety label materials.

Do not operate machines with missing decals/ nameplates.

⚠ WARNING

UNSAFE OPERATION HAZARD

All safety decals must be legible to alert personnel of safety hazards. Replace any illegible or missing decals immediately. Safety ldecals removed during any repair work must be replaced in their original position before the engine is placed back into service. Do not operate the engine if there are missing or badly worn safety decals.

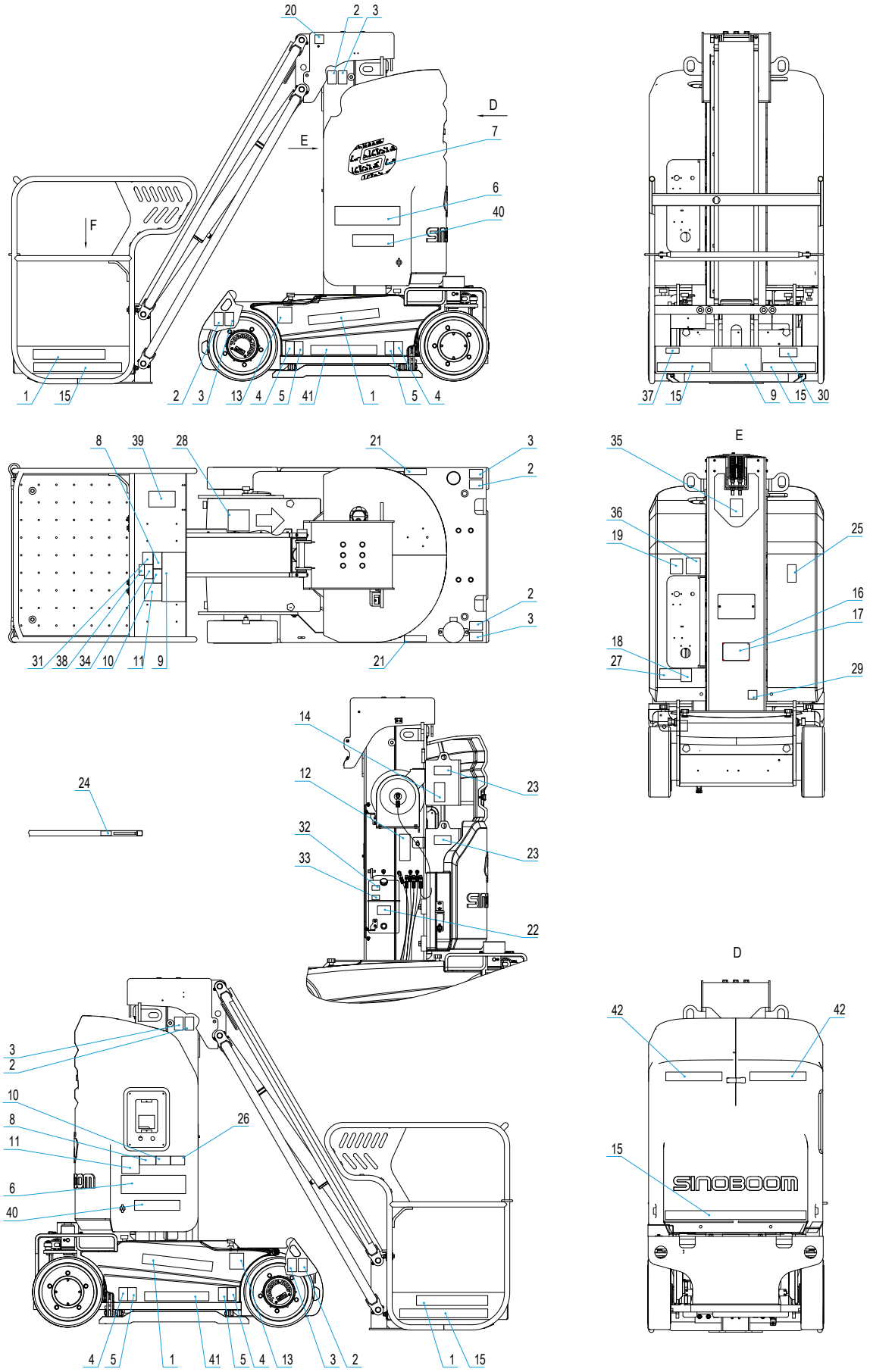
20
2
3
D
E
7
6
40
F
1
15
2
3
13
4
5
41
1
5
4
37
15
9
15
30
8
39
28
21
3
2
2
3
31
38
34
10
11
9
21
35
E
36
19
25
16
17
18
27
29
24
14
12
23
32
23
33
22
D
42
42
15
3
2
10
8
11
26
6
40
4
5
1
41
5
4
13
3
2
1
15

No.	GB	CE - Metric	CE - Imperial	Description	Quant-ity
	109002100013	109002103018	110001100011	General decals diagram	1
1	101072103040	101040103021	101040103021	LOGO SINOBOOM	4
2	101014100020	101014100020	101014100020	Decal – Lifting point	6
3	101014100021	101014100021	101014100021	Decal – Anchorage point	6
4	109002103016	109002103016	109002103016	Decal - Tire ground load 1200kg	4
5	101014100013	101014100013	101014100013	Decal – Crushing hazard	4
6	109002103040	109002103040	109002103038	Decal - Trade name	2
7	101048103026	101048103026	101048103026	Decal LOGO (white)	1
8	101040100005	101040100005	101040100005	Decal – Refer to the manuals	2
9	109002103042	109002103042	109002103042	Decal – Operation instructions	2
10	109002100006	109002100006	109002100006	Decal – Tipping hazard	2
11	109002100009	109002100009	109002100009	Decal – Electrocution hazard	2
12	109002100015	109002100015	109002100015	Decal –Pump operation instructions	1
13	109002103020	109002103020	109002103020	Decal – Brake release	2
14	101014100014	101014100014	101014100014	Decal – No smoking or open fire	1
15	/	216060000004	216060000004	Yellow & black hazard warning tape w. stripes, 50mm wide	3
16	215050000012	215050000012	215050000012	Blind rivet 4×8-ZnD GB/T 12618.2	4
17	109002100004	109002100018	109002100018	Nameplate	1
18	109002100012	109002100012	109002100012	Decal – Charging voltage	1
19	101056103002	104011100016	104011100016	Decal – Main power switch	1
20	109002103005	109002103005	109002103005	Decal – Jib emergency lowering	1
21	101014100032	101014100032	101014100032	Decal – Machine serial number	2
22	101014100022	101014100022	101014100022	Decal - Hydraulic oil filler	1
23	101012100001	101012100001	101012100001	Decal – No smoking or open fire	2
24	101048100014	103006103014	103006103014	Decal – Anchorage point	2
25	109002100007	109002100007	109002100007	Decal – Crushing hazard	1
26	109002100011	109002100011	109002100011	Decal – Crushing hazard	1
27	109002100008	109002100008	109002100008	Decal – Electrocution hazard	1
28	103003100010	103003100010	103003100010	Decal – Direction marking	1
29	109002100014	109002100014	109002100014	Decal – Emergency lowering	1
30	101072103042	101058103001	101058103001	LOGO-IPAF	1
31	101055103016	104011100016	104011100016	Decal – Emergency stop button	1
32	104011100010	104011100010	104011100010	Decal – Hydraulic oil level	1

No.	GB	CE - Metric	CE - Imperial	Description	Quant-ity
33	104011100003	104011100003	104011100003	Decal – Hydraulic oil level	1
34	109002103014	/	/	Decal – Collision hazard	1
35	109002103015	109002103039	109002103039	Decal – Wire rope inpsection	1
36	109002103012	109002103012	109002103012	Decal – Brake release	1
37	/	/	/	Decal – Annual inspection date	1
38	/	/	/	Decal – Non-insulated	1
39	/	/	/	Decal – Operation instructions	1
40	101072103041	/	/	Decal – Sinoboom	2
41	101072103047	/	/	Decal - Service number (lead-acid)	2
42	216060000004	/	/	Yellow & black hazard warning stripe tape (50mm wide)	2

No.	GB	CE - Metric	CE - Imperial	Description	Quant-ity
	109002103024	109002103000	109002103028	General decals diagram	1
1	101040103021	101040103021	101040103021	LOGO-SINOBOOM	4
2	101014100020	101014100020	101014100020	Decal – Lifting point	6
3	101014100021	101014100021	101014100021	Decal – Anchorage point	6
4	109002103016	109002103019	109002103019	Decal - Tire ground load 1200kg	4
5	101014100013	101014100013	101014100013	Decal – Crushing hazard	4
6	109002103040	109002103038	109002103038	Decal - Trade name	2
7	101048103026	101048103026	101048103026	Decal LOGO (white)	1
8	101040100005	101040100005	101040100005	Decal – Refer to the manuals	2
9	109002103042	109002103043	109002103043	Decal – Operation instructions	2
10	109002100006	109002100006	109002100006	Decal – Tipping hazard	2
11	109002100009	109002103004	109002103004	Decal – Electrocution hazard	2
12	109002100015	109002100015	109002100015	Decal –Pump operation instructions	1
13	109002103020	109002103020	109002103020	Decal – Brake release	2
14	101014100014	101014100014	101014100014	Decal – No smoking or open fire	1
15	216060000004	216060000004	216060000004	Yellow & black hazard warning tape w. stripes, 50mm wide	3
16	215050000012	215050000012	215050000012	Blind rivet 4×8-ZnD GB/T 12618.2	4
17	109002103025	109002103036	109002103036	Nameplate	1
18	109002100012	109002100012	109002100012	Decal – Charging voltage	1
19	101016100031	101016100031	101016100031	Decal – Main power switch	1

No.	GB	CE - Metric	CE - Imperial	Description	Quant-ity
20	109002103005	109002103005	109002103005	Decal – Jib emergency lowering	1
21	101014100032	101014100032	101014100032	Decal – Machine serial number	2
22	101014100022	101014100022	101014100022	Decal - Hydraulic oil filler	1
23	101012100001	101012100001	101012100001	Decal – No smoking or open fire	2
24	103006103014	103006103014	103006103014	Decal – Anchorage point	2
25	109002100007	109002100007	109002100007	Decal – Crushing hazard	1
26	109002100011	109002100011	109002100011	Decal – Crushing hazard	1
27	109002100008	109002100008	109002100008	Decal – Electrocution hazard	1
28	103003100010	103003100010	103003100010	Decal – Direction marking	1
29	109002100014	109002100014	109002100014	Decal – Emergency lowering	1
30	101058103001	101058103001	101058103001	LOGO-IPAF	1
31	101055103015	101055103015	101055103015	Decal – Emergency stop button	1
32	104011100010	104011100010	104011100010	Decal – Hydraulic oil level	1
33	104011100003	104011100003	104011100003	Decal – Hydraulic oil level	1
34	109002103013	109002103013	109002103013	Decal – Collision hazard	1
35	109002103011	109002103011	109002103011	Decal – Wire rope inpsection	1
36	109002103012	109002103012	109002103012	Decal – Brake release	1
37	/	101040103015	101040103015	Decal – Annual inspection date	1
38	/	103010103014	103010103014	Decal – Non-insulated	1
39	/	109002103029	109002103029	Decal – Operation instructions	1
40	/	/	/	Decal – Sinoboom	2
41	/	/	/	Decal - Service number (lead-acid)	2
42	/	/	/	Yellow & black hazard warning stripe tape (50mm wide)	2

This Page Intentionally Left Blank

APPENDIX 1: SYMBOLS AND DESCRIPTION

CHART of SYMBOLS

Read maintenance manual	Anchorage point for 1 person only	Read operation manual	Add lubricant	Crushing hazard-Please wear work shoes
Wind speed	Chemical burn hazard	Choke the wheels	Release the brake	Wind
Noise level	Burn hazard	Keep a safe distance from high temperature	Pull out to turn on Push in to turn off	Alarm sounds
Hot or high pressure fluid ejection hazards	Hydraulic oil level - low level	Hydraulic oil level - high level	Temperature	Replace with tires of the same specifications
Only trained maintenance personnel can access the bulkhead	Electrocution hazard on platform	Electrocution hazard on the ground and platform	Keep a safe distance from the electric conductors	Tip-over hazard-Avoid uneven ground
Tip-over hazard-Avoid uneven ground	Tip-over hazard-Never use machine in strong, gusty wind	Tip-over hazard-Never use machine in strong, gusty wind	Tip-over hazard-Never push or pull objects outside platform	Tip-over hazard-Never suspend objects from platform

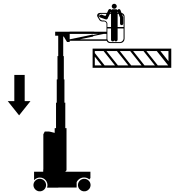 Collision hazard-Never lower platform without checking for nearby obstacles	Tip-over hazard-Never place ladders and scaffolding on the platform	Collision hazard-Never raise platform without checking for overhead obstacles	Crushing hazard-Keep hands away from nearby obstacles when raising platform	Fall hazard-Never climb on guardrails of platform
Fall hazard-Never climb on boom	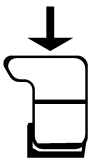 Platform capacity	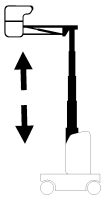 Platform up/down	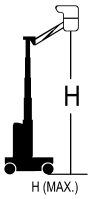 Max platform height	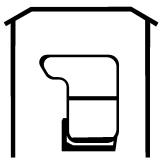 For indoor use
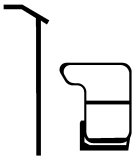 For outdoor use	Side force	Electrocution hazard	Wear protective clothing and glasses	Battery explosion hazard
No smoking or fires	No smoking or fires	Maintenance performed by professional maintenance personnel only	Lifting point	Transport tiedown
Tire load against ground	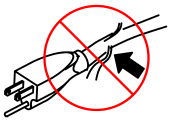 Do not use damaged cords	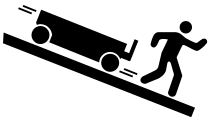 Collision hazard-Never release the brake on a slope	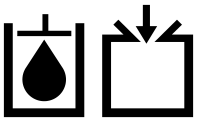 Hydraulic oil filler port	Fast/high speed
Slow/low speed	Tool or weight	Horn		

APPENDIX 2: PREPARE THE WORK RECORD BEFORE DELIVERY

PREPARE THE WORK RECORD BEFORE DELIVERY			
Model			
Serial No.			
Inspection Item	**YES/Machine is in Good Condition**	**NO/Machine Has Damage or Malfunction**	**REPAIRED/Machine Has Been Repaired**
Pre-operational Inspection			
Maintenance Procedure			
Functional Inspection			
Machine Buyer/ Renter			
Inspector Signature			
Inspector Title			
Inspector Company			

NOTE:

1. Prepare the machine before delivery, which includes performing a pre-delivery inspection, following maintenance procedures and performing functional inspections.
2. Use the table to record the results. After each section is complete, mark the appropriate box.
3. Record the inspection results. If any inspection results are "NO", the machine must be stopped, and re-inspected after repair is completed and the box marked "inspection" must be checked.

This Page Intentionally Left Blank

APPENDIX 3: MAINTENANCE INSPECTION REPORT

MAINTENANCE INSPECTION REPORT				
Model				
Serial No.				
Daily/pre-operation	**YES/Machine is in Good Condition**	**NO/Machine Has Damage or Malfunction**	**REPAIRED/ Machine Has Been Repaired**	**Problem Description**
Mast/boom components				
Inspect retract cable				
Electrical and hydraulic systems				
Inspect hydraulic oil level				
Inspect battery level				
Functions and controls				
Inspect ground controls				
Inspect platform controls				
Inspect emergency lowering				
Inspect drive speed				
Inspect pothole protection				
Inspect tilt protection				
Inspect brake system				
Inspect load sensing system				
Overall machine components				
Inspect visually the overall machine components				
Inspect manuals and decals				
Inspect safety belt and helmet				
After 30 days or 50h of operation	**YES/Machine is in Good Condition**	**NO/Machine Has Damage or Malfunction**	**REPAIRED/ Machine Has Been Repaired**	**Problem Description**
Chassis and turntable components				

MAINTENANCE INSPECTION REPORT

Inspect tires, rims and fasteners				
Electrical and hydraulic systems				
Inspect hydraulic filter elements				
Every 6 months or 500h of operation	**YES/Machine is in Good Condition**	**NO/Machine Has Damage or Malfunction**	**REPAIRED/ Machine Has Been Repaired**	**Problem Description**
Chassis and turntable components				
Lubricate steer system (-wheel support)				
Lubricate slewing bearing				
Inspect tires, rims and fasteners				
Inspect slewing bearing bolts				
Mast/boom components				
Lubricate chains				
Electrical and hydraulic systems				
Inspect hydraulic cylinder drift				
Inspect hydraulic hoses				
Inspect hand pump				
Functions and controls				
Inspect brake release				
Inspect emergency lowering				
Annually or every 1000h of operation	**YES/Machine is in Good Condition**	**NO/Machine Has Damage or Malfunction**	**REPAIRED/ Machine Has Been Repaired**	**Problem Description**
Chassis and turntable components				
Inspect tires, rims and fasteners				
Mast/boom components				
Inspect boom wear pads				
Inspect chain tensioning				

MAINTENANCE INSPECTION REPORT

Inspect mast sections 1 and 2 tightly secured to the brackets				
Electrical and hydraulic systems				
Inspect the battery				
Replace hydraulic filter elements				
Bi-annually or every 2000h of operation	**YES/Machine is in Good Condition**	**NO/Machine Has Damage or Malfunction**	**REPAIRED/ Machine Has Been Repaired**	**Problem Description**
Electrical and hydraulic systems				
Replace hydraulic oil				
Every 5 years or 5000h of operation	**YES/Machine is in Good Condition**	**NO/Machine Has Damage or Malfunction**	**REPAIRED/ Machine Has Been Repaired**	**Problem Description**
Mast/boom components				
Replace retract cable				
Every 10 years or 10000h of operation	**YES/Machine is in Good Condition**	**NO/Machine Has Damage or Malfunction**	**REPAIRED/ Machine Has Been Repaired**	**Problem Description**
Overall machine components				
Inspect the overall machine components				
User				
Inspector signature				
Inspection date				
Inspector title				
Inspector company				

This Page Intentionally Left Blank

APPENDIX 4: MAJOR MODIFICATION AND REPAIR RECORD

Major Modification and Repair Record					
Model					
Serial No.					
Date	**Problem Description**	**Modification/Repair Item**	**Machine Status af-ter Change**	**Repairman's Company and Position**	**Repair-man Signature**

Note:

1. A major modification/repair is a modification/repair made to all or part of a machine that affects the stability, strength or performance of the machine.
2. Use this form to record major modifications/repairs made to the machine. Keep the form properly until the machine is taken out of service, or as requested by the machine owner/company.
3. The machine must be inspected and verified after major modifications/repairs, with the inspection items including but not limited to all items in the maintenance and inspection report.
4. If the inspection result of each item in the Maintenance and Inspection Report is "YES", the "Machine Status after Modification/Repair" in the form will be "Good" and the machine can be used. If either inspection result is "NO", the machine must be re-inspected after the repair is completed until the machine is in "Good" condition before continuing to use the machine.

Always for Better Access Solutions

Hunan Sinoboom Intelligent Equipment Co., Ltd.

No.128, East Jinzhou Avenue, Ningxiang High-tech Industrial Park, Changsha, Hunan, China

0086-0731-87116222 (Sales) & 0086-0731-87116333 (Service)
sales@sinoboom.com
www.sinoboom.com

North American Subsidiary

Sinoboom North American LLC

310 Mason Creek Drive
unit #100
Katy, TX 77450, US
Tel: (281) 729–5425
E-mail: info@sinoboom.us

Europe Subsidiary

Sinoboom B.V.

Nikkelstraat 26, NL-2984 AM Ridderkerk,
The Netherlands
Tel: +31 180 225 666
E-mail: info@sinoboom.eu

Korea Subsidiary

Sinoboom Korea Co., Ltd.

95, Docheong-ro, Yeongtong-gu, Suwon-si, Gyeonggi-do, Republic of Korea
Tel: 010–8310–8026
E-mail: ka1@sinoboom.com

Australia Subsidiary

Sinoboom Intelligent Equipment Pty Ltd.

50/358 Clarendon St, South Melbourne
VIC 3205, Australia
E-mail: au@sinoboom.com

Singapore Subsidiary

Star Access Solutions Pte. Ltd.

112 Robinson Road #03-01 Robinson 112
Singapore 068902

Poland Subsidiary

Sinoboom Poland sp. z o.o.

Ul. Bolesława Krzywoustego 74A
61-144 Poznań, Poland